Grove TMS800E

Product Guide

ASME B30.5
Imperial 85% / Metric 85%

Features

- 12,6 m - 39 m (41 ft - 128 ft) four-section full power MEGAFORM™ boom
- 10 m – 17 m (33 ft – 56 ft) manual offset bi-fold swingaway
- 2 x 6,1 m (2 x 20 ft) intermediate lattice inserts
- 10 886 kg (24,000 lb) counterweight with hydraulic removal system
- Cummins QSM 402, six-cylinder after cooled 300 kW (402 hp) engine
- Front and rear air ride suspension

Features

MEGAFORM™ boom

The Grove MEGAFORM™ boom shape eliminates weight and increases capacity compared to conventional shapes.

Lattice extension

For improved up and over reach, a bi-fold lattice extension is available on the TMS800E and manually offsets from 0° to 40°.

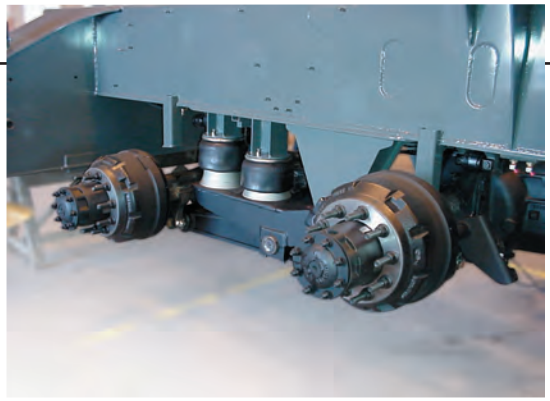

Suspension system

Standard front and rear air ride suspension provides a comfortable ride at maximum speed of 105 km/h (65 mph).

Contents

Specifications	4
Dimensions	7
Travel proposals	8
Working range - Imperial 85%	9
Load charts - Imperial 85%	11
Working range - Metric 85%	35
Load charts - Metric 85%	37
Load handling	61
Symbols glossary	62

Specifications

Superstructure

Boom

12,5 m - 39 m (41 ft - 128 ft) four section, full power MEGAFORM™ boom.
Maximum tip height: 41,1 m (135 ft).

Boom nose

Four nylatron sheaves, mounted on heavy duty tapered roller bearings with removable pin type rope guards. Quick reeve boom nose. Removable auxiliary boom nose with removable pin type rope guard.

Boom elevation

Single lift cylinder with safety valve provides boom angle from -3˚ to +78˚.

Offsettable lattice extension

10 m - 17 m (33 ft - 56 ft) bifold lattice swingaway extension, manual offsettable at 0˚, 20˚ and 40˚.
Maximum tip height: 58,2 m (191 ft)

* Optional lattice extension

Two 6,1 m (20 ft) inserts for use with lattice swingaway extension to increase length up to 23,2 m (76 ft) or 29,3 m (96 ft).
Maximum tip height: 70,1 m (230 ft)

Load moment and anti-two block system

Standard "Graphics Display" load moment and anti-two block system with audio-visual warning and control lever lockout. These systems provide electronic display of boom angle, boom length, radius, tip height, relative load moment, maximum permissible load, load indication and warning of impending two-block condition. The standard **"Work Area Definition System"** allows the operator to pre-select and define safe working areas. If the crane approaches the pre-set limits, audio-visual warnings aid the operator in avoiding job-site obstructions.

Cab

Steel constructed cab with acoustical lining, hydraulic tilt capability to +20°, tinted safety glass, adjustable operator's seat, opening side and rear windows, sliding skylight with wiper, and sunscreen. Other features include hot water heater and defroster, armrest integrated single axis electronic crane controls and ergonomically arranged instrumentation.

Swing

Axial piston fixed displacement motor and planetary gear box. Infinitely variable to 1.7 rpm. Holding brake and service brake.

Counterweight

3629 kg (8000 lb) consisting of various sections with hydraulic installation/removal system.

*Optional "Heavy Lift" package consisting of (1) 1814 kg (4000 lb) and (1) 2722 kg (6000 lb) section, for a total of 8165 kg (18,000 lb).

*Optional "XL" counterweight package consisting of (1) 2721 kg (6000 lb) slab, (1) 1814 kg (4000 lb) slab and (2) 1361 kg (3000 lb) wing weights in addition to standard; for a total of 10 886 kg (24,000 lb) of counterweight.

Hydraulic system

2 piston and 3 gear type pumps with at total capacity of 593.5 l/m (156.8 gpm). Maximum operating pressure is 27,6 MPa (4000 psi).
Thermostatically controlled oil cooler keeps oil at optimum operating temperature.
Tank capacity: 657 l (173.5 gal)

Hoist

Main and auxiliary hoist are powered by axial piston motor with planetary gear and brake.
"Thumb-thumper" hoist drum rotation indicator alerts operator of hoist movement.

Single line pull:	1st layer:	9185 kg (20,250 lb)
	3rd layer:	7716 kg (17,010 lb)
	5th layer:	6650 kg (14,660 lb)

Maximum line speed: 157 m/min (514 fpm)

Maximum permissible line pull:
7790 kg (17 175 lb) 35x7 rope

Denotes optional equipment

Rope diameter: 19 mm (3/4 in)

Rope length: 185 m (607 ft) main hoist
185 m (607 ft) auxiliary hoist

Rope type: 35 x 7 Class, Rotation Resistant
Maximum rope stowage: 256 m (841 ft)

Carrier

Chassis

Triple box section, four-axle carrier, fabricated from high strength, low alloy steel with towing and tie-down lugs.

Outrigger system

Four hydraulic telescoping, two-stage, double box beam outriggers with inverted jack and integral holding valves. Quick release type outrigger floats 610 mm (24 in) diameter. Three position setting with fully extended, intermediate (50%) extended and fully retracted capacities. 5th front jack with self-storing pad and automatic first-retract.
Outrigger Monitoring System comes standard (required for North America and Canada). Maximum outrigger pad load: 46 176 kg (101,800 lb).

Outrigger controls

Located in the superstructure cab and on either side of the carrier. Crane level indicator (sight bubble).

Engine - North America

Cummins ISX 11.9 six cylinder, turbo charged and after cooled diesel engine. 11.9 L (729 in³) 336 kW (450 bhp) at 1800 rpm. Maximum torque 2102 Nm (1550 lb-ft) at 1400 rpm. 2013 “On Highway” EPA, Carb compliant.

Equipped with engine compression brake, audio-visual engine distress system and ether start aid.

Fuel Requirement: Maximum of 15 ppm sulfur content (Ultra Low Sulfur Diesel). Diesel exhaust fluid required.

Engine - Export

Cummins QSM 11 six cylinder, turbo charged and after cooled diesel engine. 10.8 L (660 in³), 300 kW (402 bhp) at 1800 rpm. Maximum torque 1898 Nm (1400 lb-ft) at 1400 rpm. “Off Highway” Tier lll EPA, Carb and EU Stage IIIA compliant.

Equipped with engine compression brake, audio-visual engine distress system and ether start aid.

Fuel Requirement: Maximum of 5000 ppm sulfur content.

Fuel tank capacity

379 L (100 gal).

Transmission

Roadranger manual transmission with 11 speeds forward, three speeds reverse.

Drive

8 x 4 x 4.

Steering

Front axles, single circuit, mechanical steering with hydraulic power assist. Turning radius: 13,7 m (45.1 ft).

Axles

Front: (2) beam-type steering axles, 2,12 m (83.4 in) track.
Rear: (2) single reduction drive axles, 1,89 m (74.5 in) track. Inter-axle differential locks.

Brakes

S-cam, dual air split system operating on all wheels. Spring-applied, air released parking brake acting on rear axles. Air dryer.

*Denotes optional equipment

Specifications

Suspension

Front: Walking beam with air bags and shock absorbers.
Rear: Walking beam with air bags and shock absorbers.

Tires

Front: 445/65R 22.5 tubeless, mounted on aluminum disc wheels.
Rear: 315/80R 22.5 tubeless, mounted on aluminum disc wheels, inner steel.

Lights

Full lighting package including turn indicators, head, tail, brake, and hazard warning lights.

Cab

One man design, aluminum fabricated with acoustical lining and tinted safety glass throughout. Deluxe fabric covered seat with air adjustment. Complete driving controls and engine instrumentation including tilt telescope steering wheel, tachometer, speedometer, voltmeter, water temp., oil pressure, fuel level, air pressure gauge with A/V warning and engine high temp./low oil pressure A/V warning. Other standard items include hot water heater/defroster, electric windshield wash/wipe, fire extinguisher, seat belt, door lock, air horn, and air conditioning.

Electrical system

Four maintenance-free batteries provide 24 V electrical system. Standard battery disconnect.

Maximum speed

104 km/h (65 mph)

Gradeability (theoretical)

70%

Miscellaneous standard equipment

Aluminum fenders with rear storage compartments; dual rear view mirrors; electronic back-up alarm; sling/tool box; tire inflation kit; air cleaner restriction indicator; headache ball stowage; aluminum wheels, event recorder. Hoist access platform. Crane Star asset management system

* Optional equipment

- Auxiliary Lighting and Convenience Package: Includes amber strobe for superstructure and carrier cab, dual boom base mounted floodlights and LMI light bar.
- Hook blocks
- Pintle hook (rear)
- Cross axle differential locks
- Trailing Boom Package
- Aluminum outrigger pads
- Counterweight Packages
- Tow cable
- Wind speed indicator
- Winterfront radiator cover

**Denotes optional equipment*

Dimensions

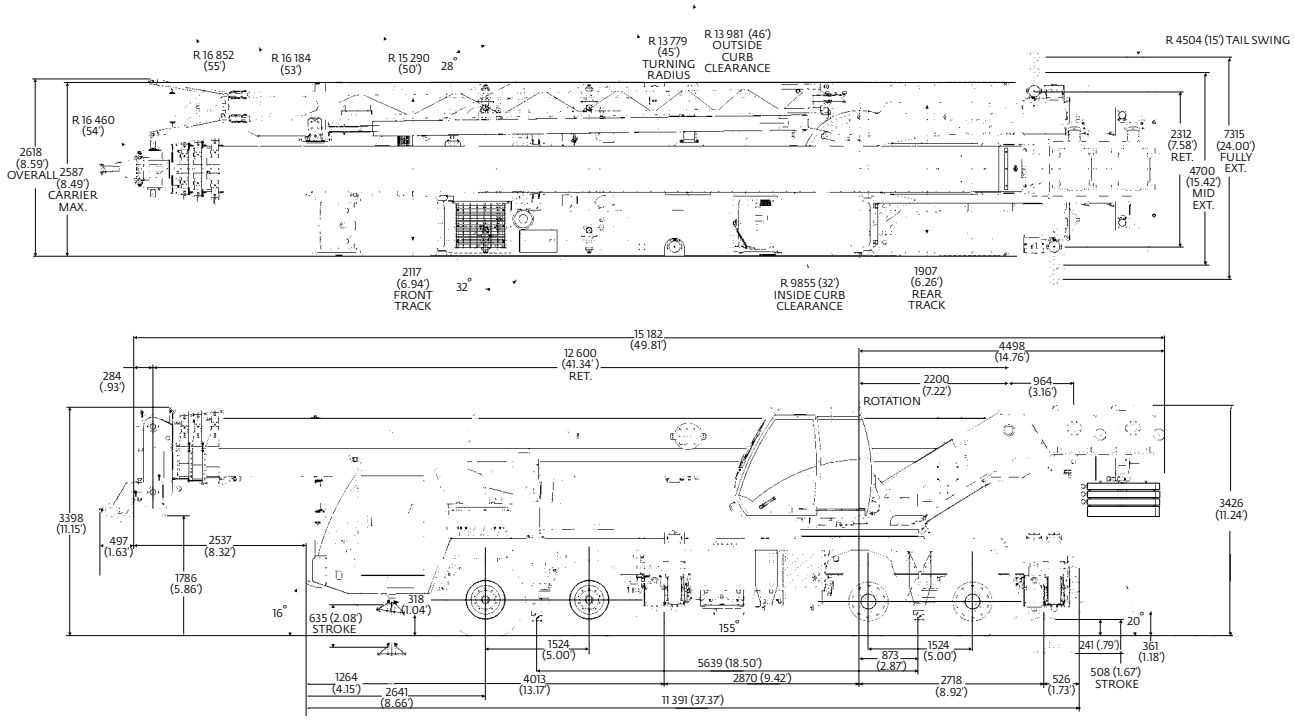

Note: Dimensions shown as mm (ft).

Unit configuration kg (lb)	Front		Rear		Gross	
Basic machine: Includes ISX11.9 2013 on-highway engine, manual bi-fold swingaway, main and auxiliary hoists with cable, aux boom nose, air conditioning in both cabs, 36,3 t (40 USt) hook block at bumper, 10,9 t (12 USt) headache ball stowed, 91 kg (200 lb) driver and no counterweight.	20 972	46,236	18 425	40,620	39 397	86,856
Add: 1814 kg (4000 lb) counterweight with pins on S/S	-967	-2132	2787	6145	1822	4013
Add: 4536 kg (10,000 lb) counterweight with pins (2722 kg [6000 lb] on deck/1814 kg [4000 lb] pinned to superstructure)	1329	2931	3218	7095	4548	10,026
Add: 6350 kg (14,000 lb) counterweight with pins (3629 kg [8000 lb] on deck/2722 kg [6000 lb] pinned to superstructure)	1616	3563	4752	10,476	6368	14,039
Add: 8165 kg (18,000 lb) counterweight with pins (3629 kg [8000 lb] on deck/4536 kg [10,000 lb] pinned to superstructure)	649	1431	7539	16,621	8188	18,052
Substitute:						
Aluminum outrigger pads	0	-1	-32	-71	-33	-72
QSM11 off-highway engine in lieu of standard ISX11.9	-330	-728	49	108	-281	-620
Remove:						
10 m - 17 m (33 ft - 56 ft) bifold swingaway	-1365	-3010	166	365	-1200	-2645
36,3 t (40 USt) hook block	-671	-1480	298	657	-373	-823
10,9 m (12 USt) headache ball	-380	-838	122	270	-258	-568
Auxiliary hoist with cable	189	417	-525	-1,157	-336	-740
Air conditioning superstructure cab	13	29	-104	-229	-91	-200
Air conditioning chassis cab	-32	-70	7	15	-25	-55
Maximum allowable Michelin Tires	22 317 kg 23 224 kg	49,200 lb 51,200 lb	27 216 kg 27 216 kg	60,000 lb 60,000 lb	49 532 kg 50 440 kg	109,200 lb 111,200 lb

Travel proposals

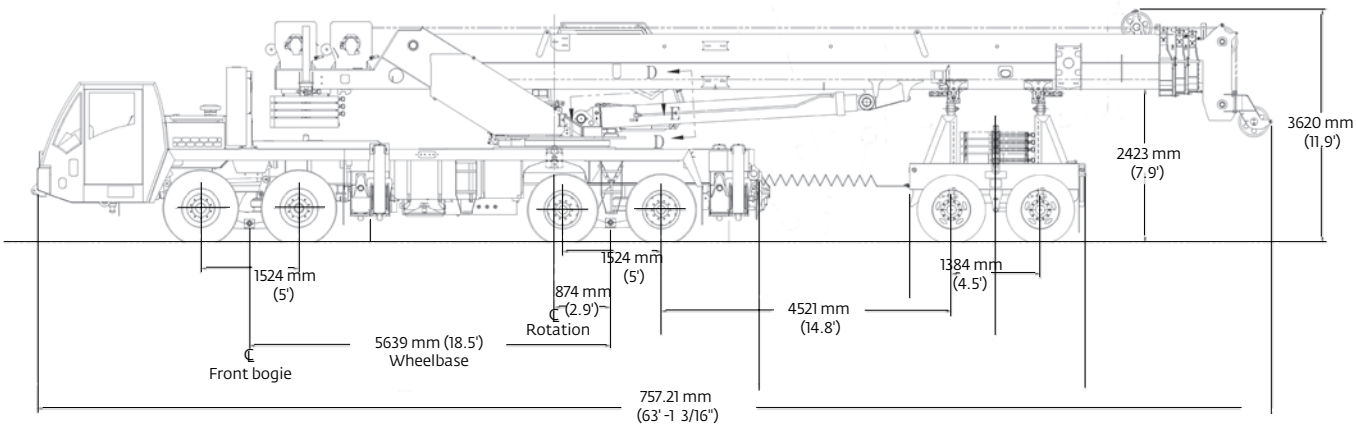

Unit configuration kg (lb)	Front		Rear		Dolly		Gross	
Basic machine: Includes ISX11.9 2013 on-highway engine, manual bifold swingaway, main and auxiliary hoists with cable, aux boom nose, air conditioning in both cabs, 36,3 t (40 USt) hook block at bumper, 10,9 t (12 USt) headache ball stowed, 91 kg (200 lb) driver, no counterweight and 2812 kg (6200 lb) boom dolly.	14 790	32,607	15 244	33,607	11 264	24,833	41 299	91,047
Add: 3629 kg (8000 lb) counterweight with pins stowed on carrier deck and 4536 kg (10,000 lb) counterweight with pins stowed on the boom dolly	3065	39,365	576	34,875	4548	34,859	1820	109,099

Counterweight configurations

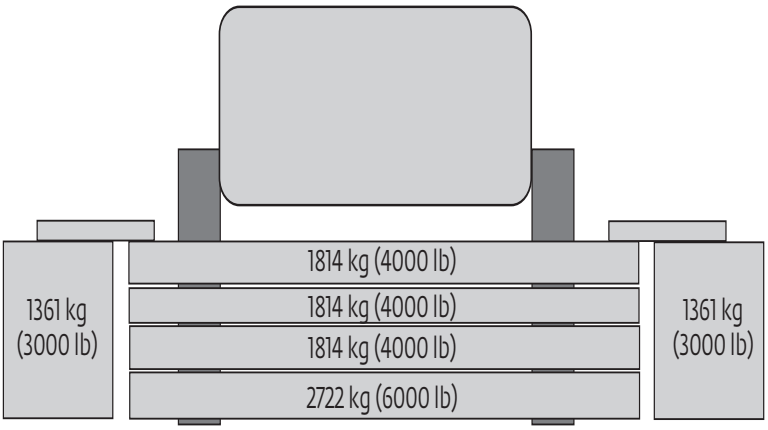

Load chart configurations			
	1814 kg (4000 lb)	2722 kg (6000 lb)	1361 kg (3000 lb)
0 kg (0 lb)			
1814 kg (4000 lb)	X		
3629 kg (8000 lb)	2X		
4536 kg (10,000 lb)	X	X	
5443 kg (12,000 lb)	3X		
6350 kg (14,000 lb)	2X	X	
8165 kg (18,000 lb)	3X	X	
10 886 kg (24,000 lb)	3X	X	2X

Working range

41.3 ft – 128 ft main boom + 33 ft – 56 ft lattice extension

(Boom deflection not shown)

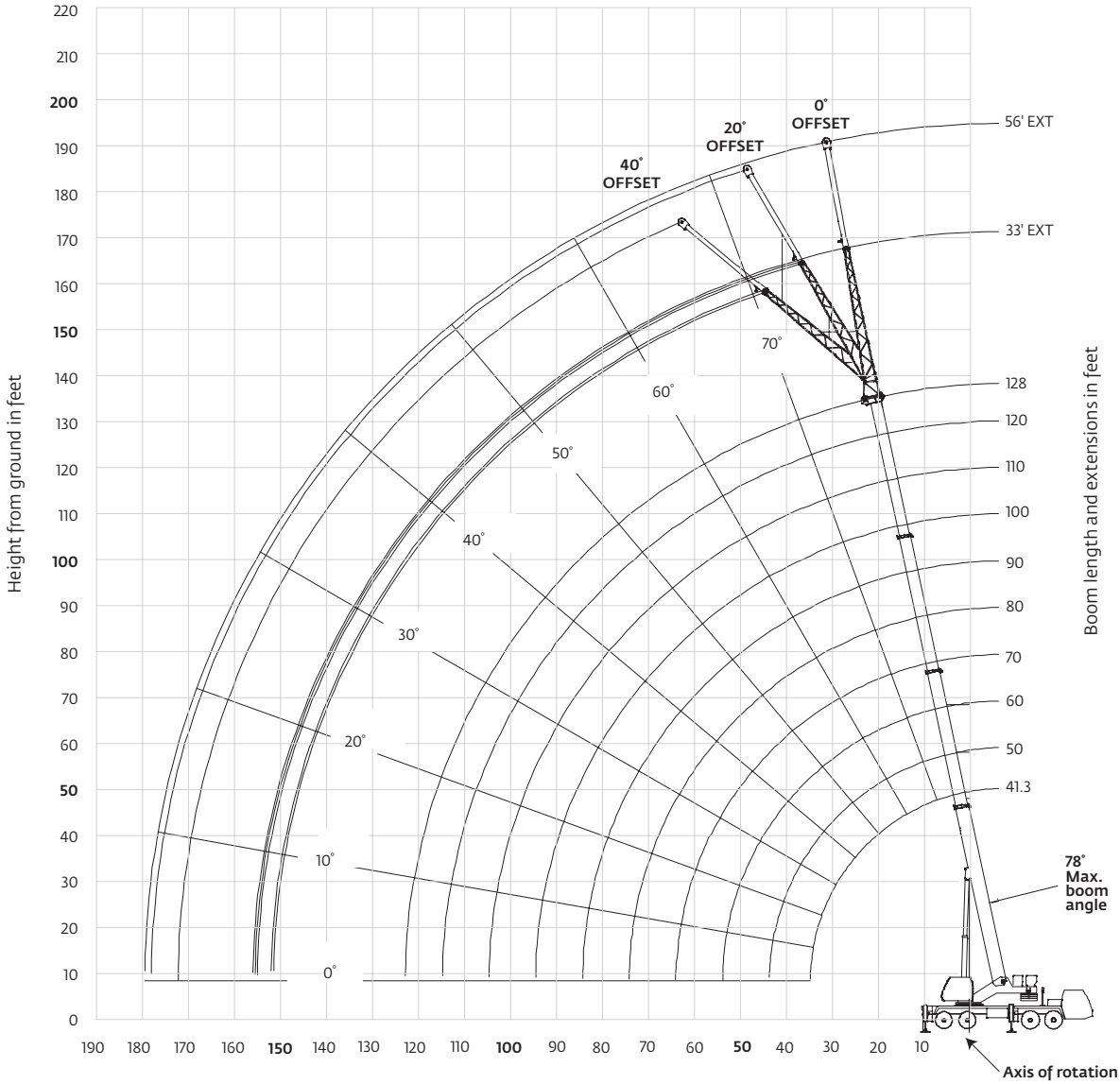

Operating radius in feet from axis of rotation

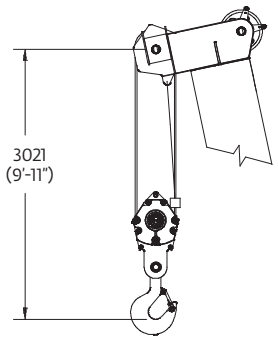

Dimensions are for largest Grove furnished hook block and overhaul ball, with anti-two block activated.

THIS CHART IS ONLY A GUIDE AND SHOULD NOT BE USED TO OPERATE THE CRANE.
The individual crane's load chart, operating instructions and other instructional plates must be read and understood prior to operating the crane.

Working range

41.3 ft – 128 ft main boom + 33 ft – 56 ft lattice extension + 20 ft or 40 ft insert

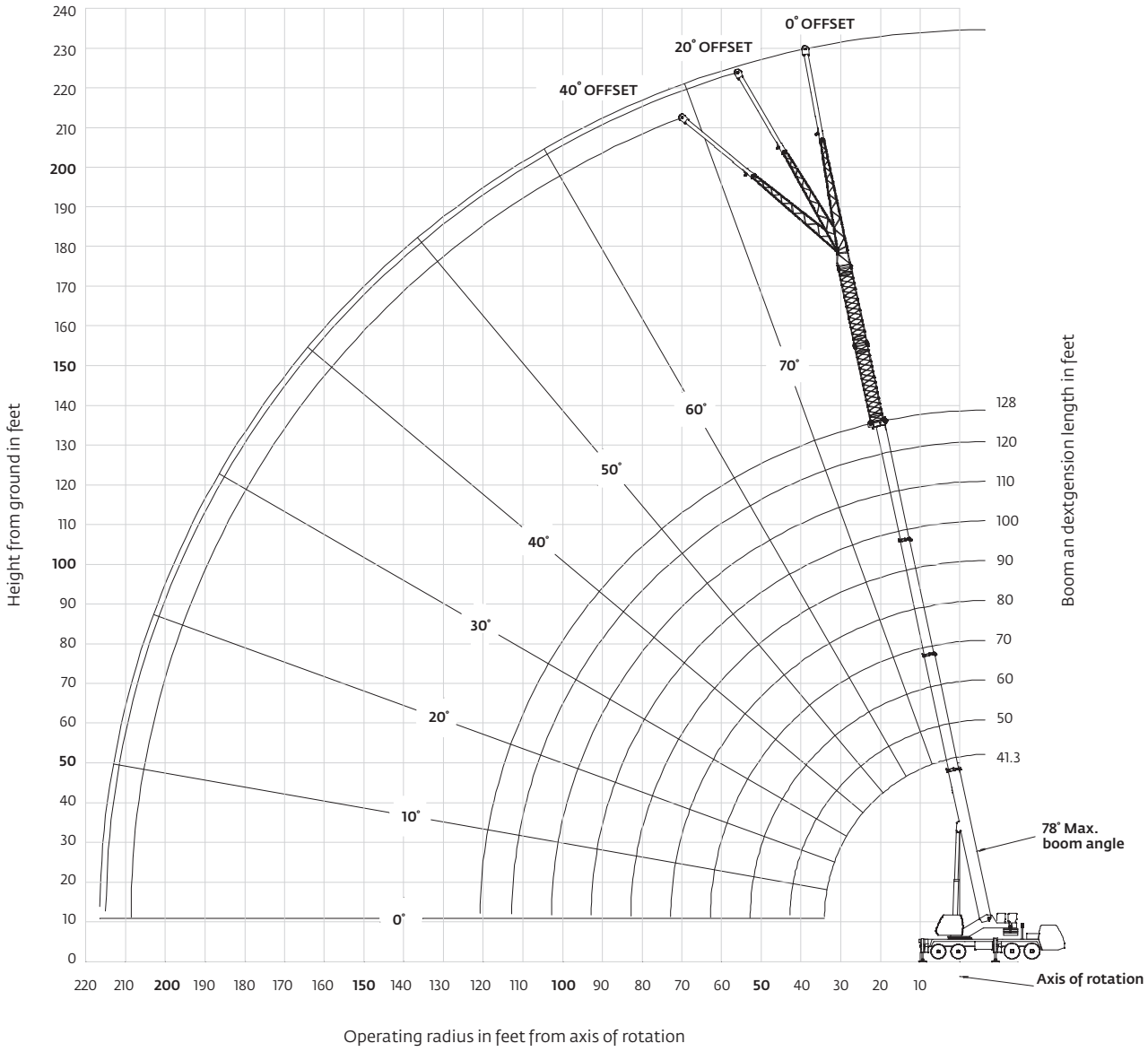

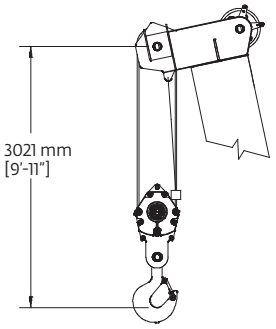

Dimensions are for largest Grove furnished hook block and overhaul ball, with anti-two block activated.

THIS CHART IS ONLY A GUIDE AND SHOULD NOT BE USED TO OPERATE THE CRANE.
The individual crane's load chart, operating instructions and other instructional plates must be read and understood prior to operating the crane.

Load charts

41.3 ft - 128 ft | 24,000 lb | 100% 24 ft 0 in spread | 360°

Pounds

Feet	41.3	50	60	**70	80	90	100	110	120	128
8	+160,000 (73)									
9	++150,000 (71.5)	86,000 (75)								
10	147,000 (70)	86,000 (74)	86,000 (77)							
12	130,500 (67)	86,000 (71.5)	86,000 (75)	41,000 (77)						
15	111,000 (62)	86,000 (67.5)	86,000 (71.5)	41,000 (74.5)	39,000 (76.5)					
20	87,650 (53.5)	86,000 (61)	85,900 (66.5)	41,000 (70)	39,000 (73)	38,800 (75)	*38,700 (78)	*31,950 (78)		
25	67,700 (44)	67,450 (54)	67,250 (61)	41,000 (65.5)	39,000 (69)	38,800 (71.5)	38,700 (74)	31,950 (75.5)	*25,750 (78)	*14,600 (78)
30	50,550 (31)	50,800 (46.5)	50,750 (55.5)	41,000 (61)	39,000 (65)	38,800 (68.5)	36,150 (70.5)	31,950 (72.5)	25,750 (74.5)	14,600 (75.5)
35		38,600 (37)	38,750 (49.5)	38,650 (56.5)	38,150 (61)	34,100 (65)	31,350 (67.5)	29,300 (70)	25,750 (72)	14,600 (73)
40		30,300 (24)	30,500 (42)	30,600 (51)	31,550 (57)	30,050 (61)	27,500 (64.5)	25,650 (67.5)	23,900 (69.5)	14,600 (71)
45			24,550 (33.5)	24,700 (45.5)	25,700 (52.5)	26,500 (57.5)	24,400 (61.5)	22,700 (64.5)	21,450 (67)	14,600 (68.5)
50	See Note 16		20,050 (21.5)	20,250 (39)	21,150 (47.5)	22,050 (53.5)	21,850 (58)	20,250 (61.5)	19,100 (64.5)	14,600 (66)
55				16,750 (31.5)	17,650 (42.5)	18,500 (49.5)	19,300 (54.5)	18,200 (58.5)	17,100 (62)	14,600 (64)
60				13,950 (20.5)	14,800 (36.5)	15,650 (45)	16,450 (51)	16,450 (55.5)	15,450 (59)	14,600 (61.5)
65					12,450 (29)	13,300 (40)	14,150 (47)	14,550 (52)	14,000 (56)	13,350 (59)
70					10,500 (18.5)	11,300 (34)	12,150 (42.5)	12,600 (48.5)	12,700 (53)	12,150 (56)
75						9650 (27.5)	10,500 (38)	10,950 (45)	11,350 (50)	11,050 (53.5)
80						8220 (17.5)	9100 (32.5)	9530 (41)	9950 (47)	10,100 (50.5)
85							7870 (26)	8300 (36.5)	8710 (43)	9090 (47.5)
90							6800 (17)	7220 (31)	7620 (39.5)	8000 (44)
95								6260 (25)	6660 (35)	7030 (40.5)
100								5410 (16)	5810 (30)	6170 (36.5)
105									5040 (24)	5410 (32)
110									4360 (16)	4720 (27)
115										4090 (21)
120										3530 (10)

Minimum boom angle (°) for indicated length (no load)	9
Maximum boom length (ft) at 0° boom angle (no load)	120

#LMI operating code. Refer to LMI manual for instructions.
*This capacity is based upon maximum obtainable boom angle.
Note: ( ) Boom angles are in degrees.
+ Special equipment is required to lift this capacity.
++9 parts of line required to lift this capacity (using aux. boom nose). Refer to Operator's & Safety Handbook for reeving diagram

Lifting capacities at zero degree boom angle

Boom angle	Main boom length in feet								
	41.3	50	60	**70	80	90	100	110	120
0°	20,750 (34.1)	15,150 (42.8)	10,500 (52.8)	6700 (63)	5100 (72.8)	3900 (82.8)	2900 (92.8)	2000 (102.8)	1300 (112.8)

Note: ( ) Reference radii in feet.
**This boom length is with inner-mid fully extended and outer-mid & fly fully retracted.

A6-829-103890

THIS CHART IS ONLY A GUIDE AND SHOULD NOT BE USED TO OPERATE THE CRANE.
The individual crane's load chart, operating instructions and other instructional platesmust be read and understood prior to operating the crane.

Load charts

41.3 ft - 128 ft	33 ft - 56 ft	24,000 lb	100% 24 ft 0 in	360°

	Pounds					
	33 ft LENGTH			56 ft LENGTH		
	0° OFFSET	20° OFFSET	40° OFFSET	0° OFFSET	20° OFFSET	40° OFFSET
35	*11,900 (78)					
40	11,900 (75.5)			6060 (77.5)		
45	11,900 (73.5)	*11,600 (78)		6060 (76)		
50	11,900 (71.5)	10,600 (75)	*9700 (78)	6060 (74.5)		
55	11,900 (70)	9770 (73)	8470 (75.5)	6060 (73)		
60	11,000 (68)	9020 (71)	7920 (73.5)	6060 (71)	*6040 (78)	
65	10,000 (66)	8360 (69.5)	7430 (72)	6060 (69.5)	5900 (75)	
70	9190 (64)	7780 (67.5)	6980 (70)	6060 (68)	5730 (73.5)	*4930 (78)
75	8460 (62)	7260 (65.5)	6580 (68)	6060 (66)	5330 (71.5)	4640 (76)
80	7820 (60)	6790 (63.5)	6210 (65.5)	6040 (64.5)	4980 (70)	4370 (74)
85	7250 (58)	6370 (61)	5870 (63.5)	5570 (63)	4650 (68)	4120 (72)
90	6740 (55.5)	5990 (59)	5560 (61)	5150 (61)	4360 (66.5)	3890 (70)
95	6290 (53.5)	5640 (56.5)	5280 (59)	4780 (59.5)	4090 (64.5)	3680 (68.5)
100	5880 (51)	5320 (54.5)	5020 (56.5)	4440 (57.5)	3840 (62.5)	3480 (66.5)
105	5510 (48.5)	5030 (52)	4770 (54)	4130 (55.5)	3610 (60.5)	3300 (64.5)
110	5170 (46)	4760 (49.5)	4550 (51)	3850 (53.5)	3400 (58.5)	3130 (62.5)
115	4780 (43.5)	4510 (46.5)	4340 (48.5)	3590 (52)	3200 (56.5)	2970 (60)
120	4200 (40.5)	4280 (44)	4150 (45)	3360 (49.5)	3020 (54.5)	2820 (58)
125	3660 (37.5)	3960 (41)		3140 (47.5)	2840 (52.5)	2680 (55.5)
130	3170 (34)	3420 (37.5)		2940 (45.5)	2690 (50)	2540 (53)
135	2710 (30.5)	2930 (34)		2760 (43)	2540 (48)	2420 (50.5)
140	2290 (26.5)	2470 (29.5)		2590 (40.5)	2400 (45)	2300 (47.5)
145	1910 (21.5)			2430 (38)	2270 (42.5)	
150	1550 (14.5)			2100 (35)	2140 (39.5)	
155				1770 (31.5)	2030 (36)	
160				1470 (28)	1770 (32.5)	
165				1180 (24)		
Minimum boom angle (°) for indicated length (no load)	13	28	43.5	19	31.5	46
Maximum boom length (ft) at 0° boom angle (no load)		110			110	

NOTE: ( ) Boom angles are in degrees.
#LMI operating code. Refer to LMI manual for operating instructions.
*This capacity is based upon maximum boom angle.

A6-829-103892

NOTES:

1.All capacities above the bold line are based on structural strength of boom extension and do not exceed 85% of tipping loads, in accordance with SAE J-765.

2.The 33 ft extension length may be used with single or double part line lifting service. The 56 ft extension length may be used for single line lifting service only.

3.For main boom lengths less than 128 ft with the boom extension erected, the rated loads are determined by boom angle. Use only the column which corresponds to the boom extension length and offset for which the machine is set up. For boom angles not shown, use rating of the next lower boom angle.

4. WARNING: Operation of this machine with heavier loads than the capacities listed is strictly prohibited. Machine tipping with boom extension occurs rapidly and without advance warning.

5.Boom angle is the angle above or below horizontal of the longitudinal axis of the boom base section after lifting rated load.

6.Capacities listed are with outriggers properly extended and vertical jacks set only.

7.When lifting over the main boom nose with 33 ft or 56 ft extension erected, the outriggers must be fully extended or 50% extended (15 ft 5 in spread).

THIS CHART IS ONLY A GUIDE AND SHOULD NOT BE USED TO OPERATE THE CRANE.
The individual crane's load chart, operating instructions and other instructional plates must be read and understood prior to operating the crane.

41.3 ft - 128 ft	33 ft - 56 ft	20 ft - 40 ft	24,000 lb	100% 24 ft 0 in	360°

Pounds

	76 ft (56 ft LENGTH + 1 INSERT)			96 ft (56 ft LENGTH + 2 INSERTS)		
	0° OFFSET	20° OFFSET	40° OFFSET	0° OFFSET	20° OFFSET	40° OFFSET
50	4850 (77.5)					
55	4850 (76)			3520 (78)		
60	4850 (74.5)			3520 (77)		
65	4850 (73)	*5290 (78)		3520 (75.5)		
70	4850 (71.5)	4860 (76.5)		3520 (74)		
75	4850 (70)	4470 (75)		3520 (72.5)	3740 (77)	
80	4730 (68.5)	4110 (73.5)	4050 (77)	3520 (71.5)	3420 (75.5)	
85	4310 (67)	3790 (72)	3500 (75.5)	3300 (70)	3100 (74.5)	*3250 (78)
90	3940 (65.5)	3500 (70)	3260 (73.5)	2970 (68.5)	2820 (73)	2720 (76)
95	3610 (63.5)	3240 (68.5)	3030 (72)	2660 (67)	2560 (71.5)	2490 (74.5)
100	3310 (62)	3000 (67)	2830 (70.5)	2390 (65.5)	2320 (70)	2270 (73)
105	3040 (60.5)	2770 (65)	2630 (68.5)	2140 (64)	2100 (68.5)	2070 (71.5)
110	2790 (59)	2570 (63.5)	2450 (66.5)	1920 (62.5)	1900 (67)	1890 (70)
115	2560 (57)	2370 (61.5)	2280 (65)	1710 (61)	1710 (65.5)	1710 (68.5)
120	2350 (55.5)	2200 (60)	2120 (63)	1520 (59.5)	1540 (64)	1550 (66.5)
125	2160 (53.5)	2030 (58)	1970 (61)	1350 (58)	1380 (62.5)	1390 (65)
130	1990 (52)	1880 (56.5)	1830 (59)	1190 (56.5)	1230 (60.5)	1250 (63.5)
135	1820 (50)	1730 (54.5)	1700 (57)	1040 (55)	1080 (59)	1110 (61.5)
140	1670 (48)	1590 (52.5)	1570 (55)			
145	1530 (46)	1470 (50.5)	1450 (52.5)			
150	1400 (43.5)	1340 (48)	1340 (50.5)			
155	1270 (41.5)	1230 (46)	1230 (48)			
160	1160 (39)	1120 (43.5)	1130 (45)			
165	1050 (36.5)	1020 (40.5)				
Minimum boom angle (°) for indicated length (no load)	35	39	43.5	53.5	58	60.5
Maximum boom length (ft) at 0° boom angle (no load)		70			70	

NOTE: ( ) Boom angles are in degrees.
#LMI operating code. Refer to LMI manual for operating instructions.
*This capacity is based upon maximum boom angle.

A6-829-103894

NOTES:

1.All capacities above the bold line are based on structural strength of boom extension and do not exceed 85% of tipping loads, in accordance with SAE J-765.

2.The 33 ft extension length may be used with single or double part line lifting service. The 56 ft extension length may be used for single line lifting service only.

3.For main boom lengths less than 128 ft with the boom extension erected, the rated loads are determined by boom angle. Use only the column which corresponds to the boom extension length and offset for which the machine is set up. For boom angles not shown, use rating of the next lower boom angle.

4. WARNING: Operation of this machine with heavier loads than the capacities listed is strictly prohibited. Machine tipping with boom extension occurs rapidly and without advance warning.

5.Boom angle is the angle above or below horizontal of the longitudinal axis of the boom base section after lifting rated load.

6.Capacities listed are with outriggers properly extended and vertical jacks set only.

7.When lifting over the main boom nose with 33 ft or 56 ft extension erected, the outriggers must be fully extended or 50% extended (15 ft 5 in spread).

Load charts

41.3 ft - 128 ft | 18,000 lb | 100% 24 ft 0 in | 360°

Pounds

Feet	Main boom length in feet 41.3	50	60	** 70	80	90	100	110	120	128
8	+160,000 (73)									
9	++150,000 (71.5)	86,000 (75)								
10	147,000 (70)	86,000 (74)	86,000 (77)							
12	130,500 (67)	86,000 (71.5)	86,000 (75)	41,000 (77)						
15	111,000 (62)	86,000 (67.5)	86,000 (71.5)	41,000 (74.5)	39,000 (76.5)					
20	87,650 (53.5)	86,000 (61)	85,900 (66.5)	41,000 (70)	39,000 (73)	38,800 (75)	*38,700 (78)	*31,950 (78)		
25	63,700 (44)	63,750 (54)	63,300 (61)	41,000 (65.5)	39,000 (69)	38,800 (71.5)	38,700 (74)	31,950 (75.5)	*25,750 (78)	*14,600 (78)
30	45,450 (31)	45,650 (46.5)	45,600 (55.5)	41,000 (61)	39,000 (65)	38,800 (68.5)	36,150 (70.5)	31,950 (72.5)	25,750 (74.5)	14,600 (75.5)
35		34,450 (37)	34,550 (49.5)	34,500 (56.5)	35,450 (61)	34,100 (65)	31,350 (67.5)	29,300 (70)	25,750 (72)	14,600 (73)
40		26,800 (24)	27,000 (42)	27,100 (51)	28,050 (57)	28,950 (61)	27,500 (64.5)	25,650 (67.5)	23,900 (69.5)	14,600 (71)
45			21,550 (33.5)	21,700 (45.5)	22,650 (52.5)	23,500 (57.5)	24,350 (61.5)	22,700 (64.5)	21,450 (67)	14,600 (68.5)
50			17,450 (21.5)	17,600 (39)	18,550 (47.5)	19,450 (53.5)	20,200 (58)	20,250 (61.5)	19,100 (64.5)	14,600 (66)
55				14,400 (31.5)	15,300 (42.5)	16,150 (49.5)	16,950 (54.5)	17,300 (58.5)	17,100 (62)	14,600 (64)
60				11,800 (20.5)	12,700 (36.5)	13,500 (45)	14,350 (51)	14,750 (55.5)	15,100 (59)	14,600 (61.5)
65					10,550 (29)	11,350 (40)	12,200 (47)	12,600 (52)	13,000 (56)	13,350 (59)
70					8760 (18.5)	9550 (34)	10,400 (42.5)	10,850 (48.5)	11,250 (53)	11,600 (56)
75						8010 (27.5)	8890 (38)	9320 (45)	9740 (50)	10,100 (53.5)
80						6690 (17.5)	7580 (32.5)	8010 (41)	8430 (47)	8790 (50.5)
85							6450 (26)	6880 (36.5)	7290 (43)	7670 (47.5)
90							5460 (17)	5880 (31)	6290 (39.5)	6670 (44)
95								5000 (25)	5410 (35)	5780 (40.5)
100								4220 (16)	4620 (30)	4990 (36.5)
105									3920 (24)	4280 (32)
110									3280 (16)	3650 (27)
115										3080 (21)
120										2560 (10)
Minimum boom angle (°) for indicated length (no load)										9
Maximum boom length (ft) at 0° boom angle (no load)										120

#LMI operating code. Refer to LMI manual for instructions.
*This capacity is based upon maximum obtainable boom angle.
Note: ( ) Boom angles are in degrees.
+ Special equipment is required to lift this capacity.
++9 parts of line required to lift this capacity (using aux. boom nose). Refer to Operator's & Safety Handbook for reeving diagram.

Lifting capacities at zero degree boom angle

Boom angle	Main boom length in feet 41.3	50	60	**70	80	90	100	110	120
0°	20,750 (34.1)	15,150 (42.8)	10,500 (52.8)	6700 (63)	5100 (72.8)	3900 (82.8)	2900 (92.8)	2000 (102.8)	1300 (112.8)

Note: ( ) Reference radii in feet.
**This boom length is with inner-mid fully extended and outer-mid & fly fully retracted.

A6-829-103749

THIS CHART IS ONLY A GUIDE AND SHOULD NOT BE USED TO OPERATE THE CRANE.
The individual crane's load chart, operating instructions and other instructional plates must be read and understood prior to operating the crane.

Load charts

41.3 ft - 128 ft	33 ft - 56 ft	18,000 lb	100% 24 ft 0 in	360°

Feet	Pounds					
	33 ft LENGTH			56 ft LENGTH		
	0° OFFSET	20° OFFSET	40° OFFSET	0° OFFSET	20° OFFSET	40° OFFSET
35	*11,900 (78)					
40	11,900 (75.5)			6060 (77.5)		
45	11,900 (73.5)	*11,600 (78)		6060 (76)		
50	11,900 (71.5)	10,600 (75)	*9700 (78)	6060 (74.5)		
55	11,900 (70)	9770 (73)	8470 (75.5)	6060 (73)		
60	11,000 (68)	9020 (71)	7920 (73.5)	6060 (71)	*6040 (78)	
65	10,000 (66)	8360 (69.5)	7430 (72)	6060 (69.5)	5900 (75)	
70	9190 (64)	7780 (67.5)	6980 (70)	6060 (68)	5730 (73.5)	*4930 (78)
75	8460 (62)	7260 (65.5)	6580 (68)	6060 (66)	5330 (71.5)	4640 (76)
80	7820 (60)	6790 (63.5)	6210 (65.5)	6040 (64.5)	4980 (70)	4370 (74)
85	7250 (58)	6370 (61)	5870 (63.5)	5570 (63)	4650 (68)	4120 (72)
90	6740 (55.5)	5990 (59)	5560 (61)	5150 (61)	4360 (66.5)	3890 (70)
95	6290 (53.5)	5640 (56.5)	5280 (59)	4780 (59.5)	4090 (64.5)	3680 (68.5)
100	5750 (51)	5320 (54.5)	5020 (56.5)	4440 (57.5)	3840 (62.5)	3480 (66.5)
105	5020 (48.5)	5030 (52)	4770 (54)	4130 (55.5)	3610 (60.5)	3300 (64.5)
110	4360 (46)	4760 (49.5)	4550 (51)	3850 (53.5)	3400 (58.5)	3130 (62.5)
115	3760 (43.5)	4150 (46.5)	4340 (48.5)	3590 (52)	3200 (56.5)	2970 (60)
120	3220 (40.5)	3560 (44)	3840 (45)	3360 (49.5)	3020 (54.5)	2820 (58)
125	2710 (37.5)	3020 (41)		3140 (47.5)	2840 (52.5)	2680 (55.5)
130	2250 (34)	2520 (37.5)		2810 (45.5)	2690 (50)	2540 (53)
135	1830 (30.5)	2070 (34)		2400 (43)	2540 (48)	2420 (50.5)
140	1440 (26.5)	1640 (29.5)		2030 (40.5)	2400 (45)	2300 (47.5)
145	1080 (21.5)			1690 (38)	2110 (42.5)	
150				1370 (35)	1730 (39.5)	
155				1070 (31.5)	1380 (36)	
160					1060 (32.5)	
Minimum boom angle (°) for indicated length (no load)	20	28	43.5	30	31.5	46
Maximum boom length (ft) at 0° boom angle (no load)	110			100		

NOTE: ( ) Boom angles are in degrees. A6-829-103771
#LMI operating code. Refer to LMI manual for operating instructions.
*This capacity is based upon maximum boom angle.

NOTES:

1.All capacities above the bold line are based on structural strength of boom extension and do not exceed 85% of tipping loads, in accordance with SAE J-765.

2.The 33 ft extension length may be used with single or double part line lifting service. The 56 ft extension length may be used for single line lifting service only.

3.For main boom lengths less than 128 ft with the boom extension erected, the rated loads are determined by boom angle. Use only the column which corresponds to the boom extension length and offset for which the machine is set up. For boom angles not shown, use rating of the next lower boom angle.

4. WARNING: Operation of this machine with heavier loads than the capacities listed is strictly prohibited. Machine tipping with boom extension occurs rapidly and without advance warning.

5.Boom angle is the angle above or below horizontal of the longitudinal axis of the boom base section after lifting rated load.

6.Capacities listed are with outriggers properly extended and vertical jacks set only.

7.When lifting over the main boom nose with 33 ft or 56 ft extension erected, the outriggers must be fully extended or 50% extended (15 ft 5 in spread).

Load charts

41.3 ft - 128 ft	56 ft	20 ft - 40 ft	18,000 lb	100% 24 ft 0 in	360°

Feet	Pounds					
	76 ft (56 ft LENGTH + 1 INSERT)			96 ft (56 ft LENGTH + 2 INSERTS)		
	0° OFFSET	20° OFFSET	40° OFFSET	0° OFFSET	20° OFFSET	40° OFFSET
50	4850 (77.5)					
55	4850 (76)			3520 (78)		
60	4850 (74.5)			3520 (77)		
65	4850 (73)	*5290 (78)		3520 (75.5)		
70	4850 (71.5)	4860 (76.5)		3520 (74)		
75	4850 (70)	4470 (75)		3520 (72.5)	3740 (77)	
80	4730 (68.5)	4110 (73.5)	4050 (77)	3520 (71.5)	3420 (75.5)	
85	4310 (67)	3790 (72)	3500 (75.5)	3300 (70)	3100 (74.5)	*3250 (78)
90	3940 (65.5)	3500 (70)	3260 (73.5)	2970 (68.5)	2820 (73)	2720 (76)
95	3610 (63.5)	3240 (68.5)	3030 (72)	2660 (67)	2560 (71.5)	2490 (74.5)
100	3310 (62)	3000 (67)	2830 (70.5)	2390 (65.5)	2320 (70)	2270 (73)
105	3040 (60.5)	2770 (65)	2630 (68.5)	2140 (64)	2100 (68.5)	2070 (71.5)
110	2790 (59)	2570 (63.5)	2450 (66.5)	1920 (62.5)	1900 (67)	1890 (70)
115	2560 (57)	2370 (61.5)	2280 (65)	1710 (61)	1710 (65.5)	1710 (68.5)
120	2350 (55.5)	2200 (60)	2120 (63)	1520 (59.5)	1540 (64)	1550 (66.5)
125	2160 (53.5)	2030 (58)	1970 (61)	1350 (58)	1380 (62.5)	1390 (65)
130	1990 (52)	1880 (56.5)	1830 (59)	1190 (56.5)	1230 (60.5)	1250 (63.5)
135	1820 (50)	1730 (54.5)	1700 (57)	1040 (55)	1080 (59)	1110 (61.5)
140	1670 (48)	1590 (52.5)	1570 (55)			
145	1530 (46)	1470 (50.5)	1450 (52.5)			
150	1400 (43.5)	1340 (48)	1340 (50.5)			
155	1160 (41.5)	1230 (46)	1230 (48)			
160		1120 (43.5)	1130 (45)			
Minimum boom angle (°) for indicated length (no load)	39	40.5	43.5	53.5	58	60.5
Maximum boom length (ft) at 0° boom angle (no load)		70			70	

NOTE: ( ) Boom angles are in degrees.
#LMI operating code. Refer to LMI manual for operating instructions.
*This capacity is based upon maximum boom angle.

A6-829-103785

NOTES:

1.All capacities above the bold line are based on structural strength of boom extension and do not exceed 85% of tipping loads, in accordance with SAE J-765.

2.The 56 ft extension length may be used for single line lifting service only.

3.For main boom lengths less than 128 ft with the boom extension erected, the rated loads are determined by boom angle. Use only the column which corresponds to the boom extension length and offset for which the machine is set up. For boom angles not shown, use rating of the next lower boom angle.

4. WARNING: Operation of this machine with heavier loads than the capacities listed is strictly prohibited. Machine tipping with boom extension occurs rapidly and without advance warning.

5.Boom angle is the angle above or below horizontal of the longitudinal axis of the boom base section after lifting rated load.

6.Capacities listed are with outriggers properly extended and vertical jacks set only.

7.When lifting over the main boom nose with 56 ft extension erected and inserts, the outriggers must be fully extended and vertical jacks set.

THIS CHART IS ONLY A GUIDE AND SHOULD NOT BE USED TO OPERATE THE CRANE.
The individual crane's load chart, operating instructions and other instructional plates must be read and understood prior to operating the crane.

41.3 ft- 128 ft | 14,000 lb | 100% 24 ft 0 in | 360°

Pounds

Feet	Main boom length in feet 41.3	50	60	**70	80	90	100	110	120	128
8	++150,000 (73)									
9	++150,000 (71.5)	86,000 (75)								
10	145,500 (70)	86,000 (74)	86,000 (77)							
12	129,000 (67)	86,000 (71.5)	86,000 (75)	41,000 (77)						
15	110,000 (62)	86,000 (67.5)	86,000 (71.5)	41,000 (74.5)	39,000 (76.5)					
20	85,200 (53.5)	84,900 (61)	84,650 (66.5)	41,000 (70)	39,000 (73)	38,800 (75)	*38,700 (78)	*31,950 (78)		
25	59,150 (44)	59,150 (54)	58,700 (61)	41,000 (65.5)	39,000 (69)	38,800 (71.5)	38,700 (74)	31,950 (75.5)	*25,750 (78)	*14,600 (78)
30	41,950 (31)	42,150 (46.5)	42,100 (55.5)	41,000 (61)	39,000 (65)	38,800 (68.5)	36,150 (70.5)	31,950 (72.5)	25,750 (74.5)	14,600 (75.5)
35		31,600 (37)	31,750 (49.5)	31,700 (56.5)	32,600 (61)	33,600 (65)	31,350 (67.5)	29,300 (70)	25,750 (72)	14,600 (73)
40		24,450 (24)	24,650 (42)	24,750 (51)	25,650 (57)	26,550 (61)	27,500 (64.5)	25,650 (67.5)	23,900 (69.5)	14,600 (71)
45			19,500 (33.5)	19,650 (45.5)	20,650 (52.5)	21,500 (57.5)	22,350 (61.5)	22,650 (64.5)	21,450 (67)	14,600 (68.5)
50			15,650 (21.5)	15,800 (39)	16,750 (47.5)	17,650 (53.5)	18,400 (58)	18,750 (61.5)	19,100 (64.5)	14,600 (66)
55				12,800 (31.5)	13,700 (42.5)	14,550 (49.5)	15,350 (54.5)	15,700 (58.5)	16,100 (62)	14,600 (64)
60				10,400 (20.5)	11,250 (36.5)	12,050 (45)	12,900 (51)	13,300 (55.5)	13,650 (59)	14,150 (61.5)
65					9240 (29)	10,050 (40)	10,900 (47)	11,300 (52)	11,700 (56)	12,100 (59)
70					7550 (18.5)	8350 (34)	9220 (42.5)	9650 (48.5)	10,050 (53)	10,400 (56)
75						6900 (27.5)	7780 (38)	8210 (45)	8630 (50)	8980 (53.5)
80						5660 (17.5)	6550 (32.5)	6980 (41)	7390 (47)	7760 (50.5)
85							5490 (26)	5910 (36.5)	6320 (43)	6700 (47.5)
90							4560 (17)	4980 (31)	5380 (39.5)	5770 (44)
95								4150 (25)	4550 (35)	4930 (40.5)
100								3420 (16)	3810 (30)	4190 (36.5)
105									3150 (24)	3520 (32)
110									2560 (16)	2930 (27)
115										2390 (21)
120										1900 (10)
Minimum boom angle (°) for indicated length (no load)										9
Maximum boom length (ft) at 0 deg. boom angle (no load)										120

#LMI operating code. Refer to LMI manual for instructions.
*This capacity is based upon maximum obtainable boom angle.
Note: ( ) Boom angles are in degrees.
++9 parts of line required to lift this capacity (using aux. boom nose). Refer to Operator's & Safety Handbook for reeving diagram.

Lifting capacities at zero degree boom angle

Boom angle	Main boom length in feet 41.3	50	60	**70	80	90	100	110	120
0°	20,750 (34.1)	15,150 (42.8)	10,500 (52.8)	6700 (63)	5100 (72.8)	3900 (82.8)	2900 (92.8)	2000 (102.8)	1300 (112.8)

Note: ( ) Reference radii in feet.
**This boom length is with inner-mid fully extended and outer-mid & fly fully retracted.

A6-829-103750

Load charts

41.3 ft - 128 ft | 33 ft - 56 ft | 14,000 lb | 100% 24 ft 0 in | 360°

Feet	Pounds					
	33 ft LENGTH			56 ft LENGTH		
	0° OFFSET	20° OFFSET	40° OFFSET	0° OFFSET	20° OFFSET	40° OFFSET
35	*11,900 (78)					
40	11,900 (75.5)			6060 (77.5)		
45	11,900 (73.5)	*11,600 (78)		6060 (76)		
50	11,900 (71.5)	10,600 (75)	*9700 (78)	6060 (74.5)		
55	11,900 (70)	9770 (73)	8470 (75.5)	6060 (73)		
60	11,000 (68)	9020 (71)	7920 (73.5)	6060 (71)	*6040 (78)	
65	10,000 (66)	8360 (69.5)	7430 (72)	6060 (69.5)	5900 (75)	
70	9190 (64)	7780 (67.5)	6980 (70)	6060 (68)	5730 (73.5)	*4930 (78)
75	8460 (62)	7260 (65.5)	6580 (68)	6060 (66)	5330 (71.5)	4640 (76)
80	7820 (60)	6790 (63.5)	6210 (65.5)	6040 (64.5)	4980 (70)	4370 (74)
85	7250 (58)	6370 (61)	5870 (63.5)	5570 (63)	4650 (68)	4120 (72)
90	6570 (55.5)	5990 (59)	5560 (61)	5150 (61)	4360 (66.5)	3890 (70)
95	5710 (53.5)	5640 (56.5)	5280 (59)	4780 (59.5)	4090 (64.5)	3680 (68.5)
100	4940 (51)	5320 (54.5)	5020 (56.5)	4440 (57.5)	3840 (62.5)	3480 (66.5)
105	4250 (48.5)	4750 (52)	4770 (54)	4130 (55.5)	3610 (60.5)	3300 (64.5)
110	3630 (46)	4070 (49.5)	4410 (51)	3850 (53.5)	3400 (58.5)	3130 (62.5)
115	3070 (43.5)	3460 (46.5)	3760 (48.5)	3550 (52)	3200 (56.5)	2970 (60)
120	2550 (40.5)	2900 (44)	3170 (45)	3060 (49.5)	3020 (54.5)	2820 (58)
125	2080 (37.5)	2390 (41)		2610 (47.5)	2840 (52.5)	2680 (55.5)
130	1650 (34)	1920 (37.5)		2200 (45.5)	2690 (50)	2540 (53)
135	1250 (30.5)	1480 (34)		1820 (43)	2370 (48)	2420 (50.5)
140		1080 (29.5)		1470 (40.5)	1950 (45)	2220 (47.5)
145				1150 (38)	1570 (42.5)	
150					1210 (39.5)	
Minimum boom angle (°) for indicated length (no load)	26.5	28.5	43.5	35	36	46
Maximum boom length (ft) at 0° boom angle (no load)		110			90	

NOTE: ( ) Boom angles are in degrees. A6-829-103772
#LMI operating code. Refer to LMI manual for operating instructions.
*This capacity is based upon maximum boom angle.

NOTES:

1.All capacities above the bold line are based on structural strength of boom extension and do not exceed 85% of tipping loads, in accordance with SAE J-765.

2.The 33 ft extension length may be used with single or double part line lifting service. The 56 ft extension length may be used for single line lifting service only.

3.For main boom lengths less than 128 ft with the boom extension erected, the rated loads are determined by boom angle. Use only the column which corresponds to the boom extension length and offset for which the machine is set up. For boom angles not shown, use rating of the next lower boom angle.

4. WARNING: Operation of this machine with heavier loads than the capacities listed is strictly prohibited. Machine tipping with boom extension occurs rapidly and without advance warning.

5.Boom angle is the angle above or below horizontal of the longitudinal axis of the boom base section after lifting rated load.

6.Capacities listed are with outriggers properly extended and vertical jacks set only.

7.When lifting over the main boom nose with 33 ft or 56 ft extension erected, the outriggers must be fully extended or 50% extended (15 ft 5 in spread).

THIS CHART IS ONLY A GUIDE AND SHOULD NOT BE USED TO OPERATE THE CRANE.
The individual crane's load chart, operating instructions and other instructional plates must be read and understood prior to operating the crane.

Load charts

41.3 ft - 128 ft | 56 ft | 20 ft - 40 ft | 14,000 lb | 100% 24 ft 0 in | 360°

Feet	Pounds					
	76 ft (56 ft LENGTH + 1 INSERT)			96 ft (56 ft LENGTH + 2 INSERTS)		
	0° OFFSET	20° OFFSET	40° OFFSET	0° OFFSET	20° OFFSET	40° OFFSET
50	4850 (77.5)					
55	4850 (76)			3520 (78)		
60	4850 (74.5)			3520 (77)		
65	4850 (73)	*5290 (78)		3520 (75.5)		
70	4850 (71.5)	4860 (76.5)		3520 (74)		
75	4850 (70)	4470 (75)		3520 (72.5)	3740 (77)	
80	4730 (68.5)	4110 (73.5)	4050 (77)	3520 (71.5)	3420 (75.5)	
85	4310 (67)	3790 (72)	3500 (75.5)	3300 (70)	3100 (74.5)	*3250 (78)
90	3940 (65.5)	3500 (70)	3260 (73.5)	2970 (68.5)	2820 (73)	2720 (76)
95	3610 (63.5)	3240 (68.5)	3030 (72)	2660 (67)	2560 (71.5)	2490 (74.5)
100	3310 (62)	3000 (67)	2830 (70.5)	2390 (65.5)	2320 (70)	2270 (73)
105	3040 (60.5)	2770 (65)	2630 (68.5)	2140 (64)	2100 (68.5)	2070 (71.5)
110	2790 (59)	2570 (63.5)	2450 (66.5)	1920 (62.5)	1900 (67)	1890 (70)
115	2560 (57)	2370 (61.5)	2280 (65)	1710 (61)	1710 (65.5)	1710 (68.5)
120	2350 (55.5)	2200 (60)	2120 (63)	1520 (59.5)	1540 (64)	1550 (66.5)
125	2160 (53.5)	2030 (58)	1970 (61)	1350 (58)	1380 (62.5)	1390 (65)
130	1990 (52)	1880 (56.5)	1830 (59)	1190 (56.5)	1230 (60.5)	1250 (63.5)
135	1820 (50)	1730 (54.5)	1700 (57)	1040 (55)	1080 (59)	1110 (61.5)
140	1600 (48)	1590 (52.5)	1570 (55)			
145	1260 (46)	1470 (50.5)	1450 (52.5)			
150		1340 (48)	1340 (50.5)			
155		1100 (46)	1230 (48)			
160			1020 (45)			
Minimum boom angle (°) for indicated length (no load)	43.5	44.5	44	53.5	58	60.5
Maximum boom length (ft) at 0° boom angle (no load)	70			60		

NOTE: ( ) Boom angles are in degrees. A6-829-103786
#LMI operating code. Refer to LMI manual for operating instructions.
*This capacity is based upon maximum boom angle.

NOTES:

1.All capacities above the bold line are based on structural strength of boom extension and do not exceed 85% of tipping loads, in accordance with SAE J-765.

2.The 56 ft extension length may be used for single line lifting service only.

3.For main boom lengths less than 128 ft. with the boom extension erected, the rated loads are determined by boom angle. Use only the column which corresponds to the boom extension length and offset for which the machine is set up. For boom angles not shown, use rating of the next lower boom angle.

4. WARNING: Operation of this machine with heavier loads than the capacities listed is strictly prohibited. Machine tipping with boom extension occurs rapidly and without advance warning.

5.Boom angle is the angle above or below horizontal of the longitudinal axis of the boom base section after lifting rated load.
6.Capacities listed are with outriggers properly extended and vertical jacks set only.

7.When lifting over the main boom nose with 56 ft extension erected and inserts, the outriggers must be fully extended and vertical jacks set.

THIS CHART IS ONLY A GUIDE AND SHOULD NOT BE USED TO OPERATE THE CRANE.
The individual crane's load chart, operating instructions and other instructional plates must be read and understood prior to operating the crane.

Load charts

41.3 ft - 128 ft | 12,000 lb | 100% 24 ft 0 in | 360°

Pounds

Main boom length in feet

Feet	41.3	50	60	**70	80	90	100	110	120	128
8	++150,000 (73)									
9	++150,000 (71.5)	86,000 (75)								
10	145,000 (70)	86,000 (74)	86,000 (77)							
12	128,500 (67)	86,000 (71.5)	86,000 (75)	41,000 (77)						
15	110,000 (62)	86,000 (67.5)	86,000 (71.5)	41,000 (74.5)	39,000 (76.5)					
20	83,950 (53.5)	83,650 (61)	83,450 (66.5)	41,000 (70)	39,000 (73)	38,800 (75)	*38,700 (78)	*31,950 (78)		
25	56,850 (44)	56,900 (54)	56,450 (61)	41,000 (65.5)	39,000 (69)	38,800 (71.5)	38,700 (74)	31,950 (75.5)	*25,750 (78)	*14,600 (78)
30	40,200 (31)	40,400 (46.5)	40,350 (55.5)	40,050 (61)	39,000 (65)	38,800 (68.5)	36,150 (70.5)	31,950 (72.5)	25,750 (74.5)	14,600 (75.5)
35		30,200 (37)	30,350 (49.5)	30,250 (56.5)	31,200 (61)	32,200 (65)	31,350 (67.5)	29,300 (70)	25,750 (72)	14,600 (73)
40		23,250 (24)	23,450 (42)	23,550 (51)	24,500 (57)	25,400 (61)	26,450 (64.5)	25,650 (67.5)	23,900 (69.5)	14,600 (71)
45			18,500 (33.5)	18,650 (45.5)	19,600 (52.5)	20,450 (57.5)	21,300 (61.5)	21,650 (64.5)	21,450 (67)	14,600 (68.5)
50			14,750 (21.5)	14,950 (39)	15,850 (47.5)	16,750 (53.5)	17,500 (58)	17,850 (61.5)	18,200 (64.5)	14,600 (66)
55				12,000 (31.5)	12,900 (42.5)	13,750 (49.5)	14,550 (54.5)	14,900 (58.5)	15,300 (62)	14,600 (64)
60				9680 (20.5)	10,500 (36.5)	11,350 (45)	12,200 (51)	12,550 (55.5)	12,950 (59)	13,450 (61.5)
65					8580 (29)	9400 (40)	10,250 (47)	10,650 (52)	11,050 (56)	11,450 (59)
70					6950 (18.5)	7750 (34)	8620 (42.5)	9050 (48.5)	9460 (53)	9810 (56)
75						6350 (27.5)	7230 (38)	7660 (45)	8080 (50)	8430 (53.5)
80						5140 (17.5)	6040 (32.5)	6460 (41)	6880 (47)	7240 (50.5)
85							5010 (26)	5430 (36.5)	5840 (43)	6220 (47.5)
90							4110 (17)	4520 (31)	4930 (39.5)	5320 (44)
95								3730 (25)	4120 (35)	4510 (40.5)
100								3020 (16)	3410 (30)	3790 (36.5)
105									2770 (24)	3140 (32)
110									2190 (16)	2560 (27)
115										2040 (21)
120										1570 (10)
Minimum boom angle (°) for indicated length (no load)										9
Maximum boom length (ft) at 0° boom angle (no load)										120

#LMI operating code. Refer to LMI manual for instructions.
*This capacity is based upon maximum obtainable boom angle.
Note: ( ) Boom angles are in degrees.

Lifting capacities at zero degree boom angle

Main boom length in feet

Boom angle	41.3	50	60	**70	80	90	100	110	120
0°	20,750 (34.1)	15,150 (42.8)	10,500 (52.8)	6700 (63)	5100 (72.8)	3900 (82.8)	2900 (92.8)	2000 (102.8)	1300 (112.8)

Note: ( ) Reference radii in feet.
**This boom length is with inner-mid fully extended and outer-mid & fly fully retracted.

A6-829-103751

THIS CHART IS ONLY A GUIDE AND SHOULD NOT BE USED TO OPERATE THE CRANE.
The individual crane's load chart, operating instructions and other instructional plates must be read and understood prior to operating the crane.

41.3 ft - 128 ft | 33 ft - 56 ft | 12,000 lb | 100% 24 ft 0 in | 360°

Feet	33 ft LENGTH 0° OFFSET	33 ft LENGTH 20° OFFSET	33 ft LENGTH 40° OFFSET	56 ft LENGTH 0° OFFSET	56 ft LENGTH 20° OFFSET	56 ft LENGTH 40° OFFSET
	Pounds					
35	*11,900 (78)					
40	11,900 (75.5)			6060 (77.5)		
45	11,900 (73.5)	*11,600 (78)		6060 (76)		
50	11,900 (71.5)	10,600 (75)	*9700 (78)	6060 (74.5)		
55	11,900 (70)	9770 (73)	8470 (75.5)	6060 (73)		
60	11,000 (68)	9020 (71)	7920 (73.5)	6060 (71)	*6040 (78)	
65	10,000 (66)	8360 (69.5)	7430 (72)	6060 (69.5)	5900 (75)	
70	9190 (64)	7780 (67.5)	6980 (70)	6060 68)	5730 (73.5)	*4930 (78)
75	8460 (62)	7260 (65.5)	6580 (68)	6060 (66)	5330 (71.5)	4640 (76)
80	7820 (60)	6790 (63.5)	6210 (65.5)	6040 (64.5)	4980 (70)	4370 (74)
85	7070 (58)	6370 (61)	5870 (63.5)	5570 (63)	4650 (68)	4120 (72)
90	6120 (55.5)	5990 (59)	5560 (61)	5150 (61)	4360 (66.5)	3890 (70)
95	5280 (53.5)	5640 (56.5)	5280 (59)	4780 (59.5)	4090 (64.5)	3680 (68.5)
100	4540 (51)	5100 (54.5)	5020 (56.5)	4440 (57.5)	3840 (62.5)	3480 (66.5)
105	3870 (48.5)	4360 (52)	4750 (54)	4130 (55.5)	3610 (60.5)	3300 (64.5)
110	3270 (46)	3710 (49.5)	4050 (51)	3720 (53.5)	3400 (58.5)	3130 (62.5)
115	2720 (43.5)	3110 (46.5)	3420 (48.5)	3200 (52)	3200 (56.5)	2970 (60)
120	2220 (40.5)	2570 (44)	2840 (45)	2730 (49.5)	3020 (54.5)	2820 (58)
125	1760 (37.5)	2070 (41)		2290 (47.5)	2840 (52.5)	2680 (55.5)
130	1340 (34)	1610 (37.5)		1900 (45.5)	2510 (50)	2540 (53)
135		1190 (34)		1530 (43)	2070 (48)	2410 (50.5)
140				1190 (40.5)	1670 (45)	1940 (47.5)
145					1300 (42.5)	
Minimum boom angle (°) for indicated length (no load)	30.5	32.5	43.5	38	39.5	46
Maximum boom length (ft) at 0° boom angle (no load)		100			90	

NOTE: ( ) Boom angles are in degrees. A6-829-103773
#LMI operating code. Refer to LMI manual for operating instructions.
*This capacity is based upon maximum boom angle.

NOTES:

1. All capacities above the bold line are based on structural strength of boom extension and do not exceed 85% of tipping loads, in accordance with SAE J-765.
2. The 33 ft extension length may be used with single or double part line lifting service. The 56 ft extension length may be used for single line lifting service only.
3. For main boom lengths less than 128 ft with the boom extension erected, the rated loads are determined by boom angle. Use only the column which corresponds to the boom extension length and offset for which the machine is set up. For boom angles not shown, use rating of the next lower boom angle.
4. WARNING: Operation of this machine with heavier loads than the capacities listed is strictly prohibited. Machine tipping with boom extension occurs rapidly and without advance warning.
5. Boom angle is the angle above or below horizontal of the longitudinal axis of the boom base section after lifting rated load.
6. Capacities listed are with outriggers properly extended and vertical jacks set only.
7. When lifting over the main boom nose with 33 ft or 56 ft extension erected, the outriggers must be fully extended or 50% extended (15 ft 5 in spread).

Load charts

41.3 ft - 128 ft	56 ft	20 ft - 40 ft	12,000 lb	100% 24 ft 0 in	360°

Feet	Pounds					
	76 ft (56 ft LENGTH + 1 INSERT)			96 ft (56 ft LENGTH + 2 INSERTS)		
	0° OFFSET	20° OFFSET	40° OFFSET	0° OFFSET	20° OFFSET	40° OFFSET
50	4850 (77.5)					
55	4850 (76)			3520 (78)		
60	4850 (74.5)			3520 (77)		
65	4850 (73)	*5290 (78)		3520 (75.5)		
70	4850 (71.5)	4860 (76.5)		3520 (74)		
75	4850 (70)	4470 (75)		3520 (72.5)	3740 (77)	
80	4730 (68.5)	4110 (73.5)	4050 (77)	3520 (71.5)	3420 (75.5)	
85	4310 (67)	3790 (72)	3500 (75.5)	3300 (70)	3100 (74.5)	*3250 (78)
90	3940 (65.5)	3500 (70)	3260 (73.5)	2970 (68.5)	2820 (73)	2720 (76)
95	3610 (63.5)	3240 (68.5)	3030 (72)	2660 (67)	2560 (71.5)	2490 (74.5)
100	3310 (62)	3000 (67)	2830 (70.5)	2390 (65.5)	2320 (70)	2270 (73)
105	3040 (60.5)	2770 (65)	2630 (68.5)	2140 (64)	2100 (68.5)	2070 (71.5)
110	2790 (59)	2570 (63.5)	2450 (66.5)	1920 (62.5)	1900 (67)	1890 (70)
115	2560 (57)	2370 (61.5)	2280 (65)	1710 (61)	1710 (65.5)	1710 (68.5)
120	2350 (55.5)	2200 (60)	2120 (63)	1520 (59.5)	1540 (64)	1550 (66.5)
125	2160 (53.5)	2030 (58)	1970 (61)	1350 (58)	1380 (62.5)	1390 (65)
130	1990 (52)	1880 (56.5)	1830 (59)	1190 (56.5)	1230 (60.5)	1250 (63.5)
135	1670 (50)	1730 (54.5)	1700 (57)	1040 (55)	1080 (59)	1110 (61.5)
140	1320 (48)	1590 (52.5)	1570 (55)			
145		1470 (50.5)	1450 (52.5)			
150		1170 (48)	1340 (50.5)			
155			1100 (48)			
Minimum boom angle (°) for indicated length (no load)	46	46	46.5	53.5	58	60.5
Maximum boom length (ft) at 0° boom angle (no load)		70			60	

NOTE: ( ) Boom angles are in degrees. A6-829-103787
#LMI operating code. Refer to LMI manual for operating instructions.
*This capacity is based upon maximum boom angle.

NOTES:

1.All capacities above the bold line are based on structural strength of boom extension and do not exceed 85% of tipping loads, in accordance with SAE J-765.

2.The 56 ft extension length may be used for single line lifting service only.

3.For main boom lengths less than 128 ft with the boom extension erected, the rated loads are determined by boom angle. Use only the column which corresponds to the boom extension length and offset for which the machine is set up. For boom angles not shown, use rating of the next lower boom angle.

4. WARNING: Operation of this machine with heavier loads than the capacities listed is strictly prohibited. Machine tipping with boom extension occurs rapidly and without advance warning.

5.Boom angle is the angle above or below horizontal of the longitudinal axis of the boom base section after lifting rated load.

6.Capacities listed are with outriggers properly extended and vertical jacks set only.

7.When lifting over the main boom nose with 56 ft extension erected and inserts, the outriggers must be fully extended and vertical jacks set.

THIS CHART IS ONLY A GUIDE AND SHOULD NOT BE USED TO OPERATE THE CRANE.
The individual crane's load chart, operating instructions and other instructional plates must be read and understood prior to operating the crane.

41.3 ft - 128 ft | 10,000 lb | 100% 24 ft 0 in | 360°

Pounds

Feet	Main boom length in feet 41.3	50	60	**70	80	90	100	110	120	128
8	++150,000 (73)									
9	++150,000 (71.5)	86,000 (75)								
10	144,500 (70)	86,000 (74)	86,000 (77)							
12	128,000 (67)	86,000 (71.5)	86,000 (75)	41,000 (77)						
15	109,500 (62)	86,000 (67.5)	86,000 (71.5)	41,000 (74.5)	39,000 (76.5)					
20	82,700 (53.5)	82,400 (61)	82,200 (66.5)	41,000 (70)	39,000 (73)	38,800 (75)	*38,700 (78)	*31,950 (78)		
25	54,550 (44)	54,600 (54)	54,150 (61)	41,000 (65.5)	39,000 (69)	38,800 (71.5)	38,700 (74)	31,950 (75.5)	*25,750 (78)	*14,600 (78)
30	38,450 (31)	38,650 (46.5)	38,600 (55.5)	38,300 (61)	39,000 (65)	38,800 (68.5)	36,150 (70.5)	31,950 (72.5)	25,750 (74.5)	14,600 (75.5)
35		28,800 (37)	28,950 (49.5)	28,850 (56.5)	29,800 (61)	30,750 (65)	31,350 (67.5)	29,300 (70)	25,750 (72)	14,600 (73)
40		22,100 (24)	22,300 (42)	22,400 (51)	23,300 (57)	24,200 (61)	25,250 (64.5)	25,500 (67.5)	23,900 (69.5)	14,600 (71)
45			17,500 (33.5)	17,650 (45.5)	18,600 (52.5)	19,450 (57.5)	20,300 (61.5)	20,600 (64.5)	20,900 (67)	14,600 (68.5)
50			13,850 (21.5)	14,050 (39)	14,950 (47.5)	15,850 (53.5)	16,600 (58)	16,950 (61.5)	17,300 (64.5)	14,600 (66)
55				11,200 (31.5)	12,100 (42.5)	12,950 (49.5)	13,750 (54.5)	14,100 (58.5)	14,500 (62)	14,600 (64)
60				8960 (20.5)	9810 (36.5)	10,650 (45)	11,450 (51)	11,850 (55.5)	12,250 (59)	12,700 (61.5)
65					7930 (29)	8740 (40)	9610 (47)	10,000 (52)	10,400 (56)	10,800 (59)
70					6350 (18.5)	7140 (34)	8020 (42.5)	8450 (48.5)	8850 (53)	9210 (56)
75						5790 (27.5)	6670 (38)	7100 (45)	7520 (50)	7870 (53.5)
80						4620 (17.5)	5520 (32.5)	5950 (41)	6360 (47)	6720 (50.5)
85							4520 (26)	4940 (36.5)	5350 (43)	5730 (47.5)
90							3650 (17)	4070 (31)	4470 (39.5)	4870 (44)
95								3300 (25)	3700 (35)	4080 (40.5)
100								2610 (16)	3000 (30)	3380 (36.5)
105									2390 (24)	2760 (32)
110									1830 (16)	2200 (27)
115										1700 (21)
120										1240 (10)
Mimimum boom angle (°) for indicated length (no load).										9
Maximum boom length (ft) for 0° boom angle (no load).										120

#LMI operating code. Refer to LMI manual for instructions.
*This capacity is based upon maximum obtainable boom angle.
Note: ( ) Boom angles are in degrees.
++9 parts of line required to lift this capacity (using aux. boom nose). Refer to Operator's & Safety Handbook for reeving diagram

Lifting capacities at zero degree boom angle

Boom angle	Main boom length in feet 41.3	50	60	**70	80	90	100	110	120
0°	20,750 (34.1)	15,150 (42.8)	10,500 (52.8)	6700 (63)	5100 (72.8)	3900 (82.8)	2900 (92.8)	2000 (102.8)	1300 (112.8)

Note: ( ) Reference radii in feet.
**This boom length is with inner-mid fully extended and outer-mid & fly fully retracted.

A6-829-103752

Load charts

41.3 ft - 128 ft | 33 ft - 56 ft | 10,000 lb | 100% 24 ft 0 in | 360°

Feet	Pounds					
	33 ft LENGTH			56 ft LENGTH		
	0° OFFSET	20° OFFSET	40° OFFSET	0° OFFSET	20° OFFSET	40° OFFSET
35	*11,900 (78)					
40	11,900 (75.5)			6060 (77.5)		
45	11,900 (73.5)	*11,600 (78)		6060 (76)		
50	11,900 (71.5)	10,600 (75)	*9700 (78)	6060 (74.5)		
55	11,900 (70)	9770 (73)	8470 (75.5)	6060 (73)		
60	11,000 (68)	9020 (71)	7920 (73.5)	6060 (71)	*6040 (78)	
65	10,000 (66)	8360 (69.5)	7430 (72)	6060 (69.5)	5900 (75)	
70	9190 (64)	7780 (67.5)	6980 (70)	6060 (68)	5730 (73.5)	*4930 (78)
75	8460 (62)	7260 (65.5)	6580 (68)	6060 (66)	5330 (71.5)	4640 (76)
80	7630 (60)	6790 (63.5)	6210 (65.5)	6040 (64.5)	4980 (70)	4370 (74)
85	6590 (58)	6370 (61)	5870 (63.5)	5570 (63)	4650 (68)	4120 (72)
90	5670 (55.5)	5990 (59)	5560 (61)	5150 (61)	4360 (66.5)	3890 (70)
95	4850 (53.5)	5480 (56.5)	5280 (59)	4780 (59.5)	4090 (64.5)	3680 (68.5)
100	4130 (51)	4690 (54.5)	5020 (56.5)	4440 (57.5)	3840 (62.5)	3480 (66.5)
105	3480 (48.5)	3980 (52)	4360 (54)	3910 (55.5)	3610 (60.5)	3300 (64.5)
110	2900 (46)	3340 (49.5)	3690 (51)	3350 (53.5)	3400 (58.5)	3130 (62.5)
115	2370 (43.5)	2760 (46.5)	3070 (48.5)	2850 (52)	3200 (56.5)	2970 (60)
120	1890 (40.5)	2240 (44)	2510 (45)	2390 (49.5)	3020 (54.5)	2820 (58)
125	1450 (37.5)	1760 (41)		1970 (47.5)	2670 (52.5)	2680 (55.5)
130	1040 (34)	1310 (37.5)		1590 (45.5)	2210 (50)	2540 (53)
135				1240 (43)	1780 (48)	2110 (50.5)
140					1390 (45)	1660 (47.5)
145					1030 (42.5)	
Minimum boom angle (°) for indicated length (no load)	33	34	43.5	40.5	41.5	46
Maximum boom length (ft) at 0° boom angle (no load)	100			80		

NOTE: ( ) Boom angles are in degrees. A6-829-103774
#LMI operating code. Refer to LMI manual for operating instructions.
*This capacity is based upon maximum boom angle.

NOTES:

1.All capacities above the bold line are based on structural strength of boom extension and do not exceed 85% of tipping loads, in accordance with SAE J-765.

2.The 33 ft extension length may be used with single or double part line lifting service. The 56 ft extension length may be used for single line lifting service only.

3.For main boom lengths less than 128 ft with the boom extension erected, the rated loads are determined by boom angle. Use only the column which corresponds to the boom extension length and offset for which the machine is set up. For boom angles not shown, use rating of the next lower boom angle.

4. WARNING: Operation of this machine with heavier loads than the capacities listed is strictly prohibited. Machine tipping with boom extension occurs rapidly and without advance warning.

5.Boom angle is the angle above or below horizontal of the longitudinal axis of the boom base section after lifting rated load.

6.Capacities listed are with outriggers properly extended and vertical jacks set only.

7.When lifting over the main boom nose with 33 ft or 56 ft extension erected, the outriggers must be fully extended or 50% extended (15 ft 5 in spread).

THIS CHART IS ONLY A GUIDE AND SHOULD NOT BE USED TO OPERATE THE CRANE.
The individual crane's load chart, operating instructions and other instructional plates must be read and understood prior to operating the crane.

41.3 ft - 128 ft | 56 ft | 20 ft - 40 ft | 10,000 lb | 100% 24 ft 0 in | 360°

Feet	Pounds					
	76 ft (56 ft + 1 INSERT)			96 ft (56 ft + 2 INSERTS)		
	0° OFFSET	20° OFFSET	40° OFFSET	0° OFFSET	20° OFFSET	40° OFFSET
50	4850 (77.5)					
55	4850 (76)			3520 (78)		
60	4850 (74.5)			3520 (77)		
65	4850 (73)	*5290 (78)		3520 (75.5)		
70	4850 (71.5)	4860 (76.5)		3520 (74)		
75	4850 (70)	4470 (75)		3520 (72.5)	3740 (77)	
80	4730 (68.5)	4110 (73.5)	4050 (77)	3520 (71.5)	3420 (75.5)	
85	4310 (67)	3790 (72)	3500 (75.5)	3300 (70)	3100 (74.5)	*3250 (78)
90	3940 (65.5)	3500 (70)	3260 (73.5)	2970 (68.5)	2820 (73)	2720 (76)
95	3610 (63.5)	3240 (68.5)	3030 (72)	2660 (67)	2560 (71.5)	2490 (74.5)
100	3310 (62)	3000 (67)	2830 (70.5)	2390 (65.5)	2320 (70)	2270 (73)
105	3040 (60.5)	2770 (65)	2630 (68.5)	2140 (64)	2100 (68.5)	2070 (71.5)
110	2790 (59)	2570 (63.5)	2450 (66.5)	1920 (62.5)	1900 (67)	1890 (70)
115	2560 (57)	2370 (61.5)	2280 (65)	1710 (61)	1710 (65.5)	1710 (68.5)
120	2350 (55.5)	2200 (60)	2120 (63)	1520 (59.5)	1540 (64)	1550 (66.5)
125	2150 (53.5)	2030 (58)	1970 (61)	1350 (58)	1380 (62.5)	1390 (65)
130	1750 (52)	1880 (56.5)	1830 (59)	1190 (56.5)	1230 (60.5)	1250 (63.5)
135	1380 (50)	1730 (54.5)	1700 (57)	1040 (55)	1080 (59)	1110 (61.5)
140	1040 (48)	1590 (52.5)	1570 (55)			
145		1240 (50.5)	1450 (52.5)			
150			1200 (50.5)			
Minimum boom angle (°) for indicated length (no load)	46.5	48	48	54	58	60.5
Maximum boom length (ft) at 0° boom angle (no load)		70			60	

NOTE: ( ) Boom angles are in degrees. A6-829-103788
#LMI operating code. Refer to LMI manual for operating instructions.
*This capacity is based upon maximum boom angle.

NOTES:

1.All capacities above the bold line are based on structural strength of boom extension and do not exceed 85% of tipping loads, in accordance with SAE J-765.

2.The 56 ft extension length may be used for single line lifting service only.

3.For main boom lengths less than 128 ft with the boom extension erected, the rated loads are determined by boom angle. Use only the column which corresponds to the boom extension length and offset for which the machine is set up. For boom angles not shown, use rating of the next lower boom angle.

4. WARNING: Operation of this machine with heavier loads than the capacities listed is strictly prohibited. Machine tipping with boom extension occurs rapidly and without advance warning.

5.Boom angle is the angle above or below horizontal of the longitudinal axis of the boom base section after lifting rated load.

6.Capacities listed are with outriggers properly extended and vertical jacks set only.

7.When lifting over the main boom nose with 56 ft extension erected and inserts, the outriggers must be fully extended and vertical jacks set.

THIS CHART IS ONLY A GUIDE AND SHOULD NOT BE USED TO OPERATE THE CRANE.
The individual crane's load chart, operating instructions and other instructional plates must be read and understood prior to operating the crane.

Load charts

41.3 ft - 128 ft | 8000 lb | 100% 24 ft 0 in | 360°

Pounds

Main boom length in feet

Feet	41.3	50	60	**70	80	90	100	110	120	128
8	++150,000 (73)									
9	++150,000 (71.5)	86,000 (75)								
10	143,500 (70)	86,000 (74)	86,000 (77)							
12	127,500 (67)	86,000 (71.5)	86,000 (75)	41,000 (77)						
15	109,000 (62)	86,000 (67.5)	86,000 (71.5)	41,000 (74.5)	39,000 (76.5)					
20	81,450 (53.5)	80,150 (61)	79,250 (66.5)	41,000 (70)	39,000 (73)	38,800 (75)	*38,700 (78)	*31,950 (78)		
25	52,250 (44)	52,300 (54)	51,850 (61)	41,000 (65.5)	39,000 (69)	38,800 (71.5)	38,700 (74)	31,950 (75.5)	*25,750 (78)	*14,600 (78)
30	36,700 (31)	36,900 (46.5)	36,850 (55.5)	36,600 (61)	37,650 (65)	38,700 (68.5)	36,150 (70.5)	31,950 (72.5)	25,750 (74.5)	14,600 (75.5)
35		27,400 (37)	27,500 (49.5)	27,450 (56.5)	28,400 (61)	29,350 (65)	30,850 (67.5)	29,300 (70)	25,750 (72)	14,600 (73)
40		20,900 (24)	21,100 (42)	21,200 (51)	22,100 (57)	23,000 (61)	24,050 (64.5)	24,300 (67.5)	23,900 (69.5)	14,600 (71)
45			16,450 (33.5)	16,600 (45.5)	17,600 (52.5)	18,400 (57.5)	19,300 (61.5)	19,600 (64.5)	19,900 (67)	14,600 (68.5)
50			12,950 (21.5)	13,150 (39)	14,050 (47.5)	14,950 (53.5)	15,700 (58)	16,050 (61.5)	16,400 (64.5)	14,600 (66)
55				10,400 (31.5)	11,300 (42.5)	12,150 (49.5)	12,950 (54.5)	13,300 (58.5)	13,700 (62)	14,300 (64)
60				8240 (20.5)	9100 (36.5)	9930 (45)	10,750 (51)	11,150 (55.5)	11,500 (59)	12,000 (61.5)
65					7270 (29)	8090 (40)	8960 (47)	9360 (52)	9740 (56)	10,150 (59)
70					5750 (18.5)	6540 (34)	7420 (42.5)	7850 (48.5)	8250 (53)	8610 (56)
75						5230 (27.5)	6120 (38)	6550 (45)	6960 (50)	7310 (53.5)
80						4100 (17.5)	5000 (32.5)	5430 (41)	5840 (47)	6210 (50.5)
85							4040 (26)	4460 (36.5)	4870 (43)	5250 (47.5)
90							3200 (17)	3620 (31)	4020 (39.5)	4420 (44)
95								2870 (25)	3270 (35)	3660 (40.5)
100								2210 (16)	2600 (30)	2980 (36.5)
105									2000 (24)	2380 (32)
110									1470 (16)	1840 (27)
115										1350 (21)
Minimum boom angle (°) for indicated length (no load).										9
Maximum boom length (ft) at 0° boom angle (no load).										102

#LMI operating code. Refer to LMI manual for instructions.
*This capacity is based upon maximum obtainable boom angle.
Note: ( ) Boom angles are in degrees.
++9 parts of line required to lift this capacity (using aux. boom nose). Refer to Operator's & Safety Handbook for reeving diagram

Lifting capacities at zero degree boom angle

Main boom length in feet

Boom angle	41.3	50	60	**70	80	90	100	110	120
0°	20,750 (34.1)	15,150 (42.8)	10,500 (52.8)	6700 (63)	5000 (72.8)	3540 (82.8)	2780 (92.8)	1870 (102.8)	1190 (112.8)

Note: ( ) Reference radii in feet.
**This boom length is with inner-mid fully extended and outer-mid & fly fully retracted.

A6-829-103753

THIS CHART IS ONLY A GUIDE AND SHOULD NOT BE USED TO OPERATE THE CRANE.
The individual crane's load chart, operating instructions and other instructional plates must be read and understood prior to operating the crane.

41.3 ft - 128 ft | 33 ft - 56 ft | 8000 lb | 100% 24 ft 0 in | 360°

Feet	Pounds					
	33 ft LENGTH			56 ft LENGTH		
	0° OFFSET	20° OFFSET	40° OFFSET	0° OFFSET	20° OFFSET	40° OFFSET
35	*11,900 (78)					
40	11,900 (75.5)			6060 (77.5)		
45	11,900 (73.5)	*11,600 (78)		6060 (76)		
50	11,900 (71.5)	10,600 (75)	*9700 (78)	6060 (74.5)		
55	11,900 (70)	9770 (73)	8470 (75.5)	6060 (73)		
60	11,000 (68)	9020 (71)	7920 (73.5)	6060 (71)	*6040 (78)	
65	10,000 (66)	8360 (69.5)	7430 (72)	6060 (69.5)	5900 (75)	
70	9190 (64)	7780 (67.5)	6980 (70)	6060 (68)	5730 (73.5)	*4930 (78)
75	8280 (62)	7260 (65.5)	6580 (68)	6060 (66)	5330 (71.5)	4640 (76)
80	7120 (60)	6790 (63.5)	6210 (65.5)	6040 (64.5)	4980 (70)	4370 (74)
85	6100 (58)	6370 (61)	5870 (63.5)	5570 (63)	4650 (68)	4120 (72)
90	5210 (55.5)	5920 (59)	5560 (61)	5150 (61)	4360 (66.5)	3890 (70)
95	4430 (53.5)	5050 (56.5)	5280 (59)	4780 (59.5)	4090 (64.5)	3680 (68.5)
100	3730 (51)	4290 (54.5)	4720 (56.5)	4120 (57.5)	3840 (62.5)	3480 (66.5)
105	3100 (48.5)	3600 (52)	3980 (54)	3530 (55.5)	3610 (60.5)	3300 (64.5)
110	2540 (46)	2980 (49.5)	3320 (51)	2990 (53.5)	3400 (58.5)	3130 (62.5)
115	2030 (43.5)	2420 (46.5)	2720 (48.5)	2510 (52)	3200 (56.5)	2970 (60)
120	1560 (40.5)	1910 (44)	2180 (45)	2060 (49.5)	2840 (54.5)	2820 (58)
125	1130 (37.5)	1440 (41)		1660 (47.5)	2350 (52.5)	2680 (55.5)
130		1010 (37.5)		1290 (45.5)	1900 (50)	2310 (53)
135					1490 (48)	1820 (50.5)
140					1110 (45)	1380 (47.5)
Minimum boom angle (°) for indicated length (no load)	36.5	36.5	4.35	43	44	46
Maximum boom length (ft) at 0° boom angle (no load)		90			80	

NOTE: ( ) Boom angles are in degrees. A6-829-103775
#LMI operating code. Refer to LMI manual for operating instructions.
*This capacity is based upon maximum boom angle.

NOTES:

1.All capacities above the bold line are based on structural strength of boom extension and do not exceed 85% of tipping loads, in accordance with SAE J-765.

2.The 33 ft extension length may be used with single or double part line lifting service. The 56 ft extension length may be used for single line lifting service only.

3.For main boom lengths less than 128 ft with the boom extension erected, the rated loads are determined by boom angle. Use only the column which corresponds to the boom extension length and offset for which the machine is set up. For boom angles not shown, use rating of th next lower boom angle.

4. WARNING: Operation of this machine with heavier loads than the capacities listed is strictly prohibited. Machine tipping with boom extension occurs rapidly and without advance warning.

5.Boom angle is the angle above or below horizontal of the longitudinal axis of the boom base section after lifting rated load.

6.Capacities listed are with outriggers properly extended and vertical jacks set only.

7.When lifting over the main boom nose with 33 ft or 56 ft extension erected, the outriggers must be fully extended or 50% extended (15 ft 5 in spread).

THIS CHART IS ONLY A GUIDE AND SHOULD NOT BE USED TO OPERATE THE CRANE.
The individual crane's load chart, operating instructions and other instructional plates must be read and understood prior to operating the crane.

Load charts

41.3 ft - 128 ft | 56 ft | 20 ft - 40 ft | 8000 lb | 100% 24 ft 0 in | 360°

Feet	Pounds					
	76 ft (56 ft LENGTH + 1 INSERT)			96 ft (56 ft LENGTH + 2 INSERTS)		
	0° OFFSET	20° OFFSET	40° OFFSET	0° OFFSET	20° OFFSET	40° OFFSET
50	4850 (77.5)					
55	4850 (76)			3520 (78)		
60	4850 (74.5)			3520 (77)		
65	4850 (73)	*5290 (78)		3520 (75.5)		
70	4850 (71.5)	4860 (76.5)		3520 (74)		
75	4850 (70)	4470 (75)		3520 (72.5)	3740 (77)	
80	4730 (68.5)	4110 (73.5)	4050 (77)	3520 (71.5)	3420 (75.5)	
85	4310 (67)	3790 (72)	3500 (75.5)	3300 (70)	3100 (74.5)	*3250 (78)
90	3940 (65.5)	3500 (70)	3260 (73.5)	2970 (68.5)	2820 (73)	2720 (76)
95	3610 (63.5)	3240 (68.5)	3030 (72)	2660 (67)	2560 (71.5)	2490 (74.5)
100	3310 (62)	3000 (67)	2830 (70.5)	2390 (65.5)	2320 (70)	2270 (73)
105	3040 (60.5)	2770 (65)	2630 (68.5)	2140 (64)	2100 (68.5)	2070 (71.5)
110	2790 (59)	2570 (63.5)	2450 (66.5)	1920 (62.5)	1900 (67)	1890 (70)
115	2560 (57)	2370 (61.5)	2280 (65)	1710 (61)	1710 (65.5)	1710 (68.5)
120	2250 (55.5)	2200 (60)	2120 (63)	1520 (59.5)	1540 (64)	1550 (66.5)
125	1840 (53.5)	2030 (58)	1970 (61)	1350 (58)	1380 (62.5)	1390 (65)
130	1460 (52)	1880 (56.5)	1830 (59)	1190 (56.5)	1230 (60.5)	1250 (63.5)
135	1110 (50)	1700 (54.5)	1700 (57)		1080 (59)	1110 (61.5)
140		1320 (52.5)	1570 (55)			
145			1300 (52.5)			
Minimum boom angle (°) for indicated length (no load)	48.5	50.5	50.5	55	58	60.5
Maximum boom length (ft) at 0° boom angle (no load)		60			60	

NOTE: ( ) Boom angles are in degrees. A6-829-103789
#LMI operating code. Refer to LMI manual for operating instructions.
*This capacity is based upon maximum boom angle.

NOTES:

1.All capacities above the bold line are based on structural strength of boom extension and do not exceed 85% of tipping loads, in accordance with SAE J-765.

2.The 56 ft extension length may be used for single line lifting service only.

3.For main boom lengths less than 128 ft with the boom extension erected, the rated loads are determined by boom angle. Use only the column which corresponds to the boom extension length and offset for which the machine is set up. For boom angles not shown, use rating of the next lower boom angle.

4. WARNING: Operation of this machine with heavier loads than the capacities listed is strictly prohibited. Machine tipping with boom extension occurs rapidly and without advance warning.

5.Boom angle is the angle above or below horizontal of the longitudinal axis of the boom base section after lifting rated load.

6.Capacities listed are with outriggers properly extended and vertical jacks set only.

7.When lifting over the main boom nose with 56 ft extension erected and inserts, the outriggers must be fully extended and vertical jacks set.

THIS CHART IS ONLY A GUIDE AND SHOULD NOT BE USED TO OPERATE THE CRANE.
The individual crane's load chart, operating instructions and other instructional plates must be read and understood prior to operating the crane.

41.3 ft - 128 ft | 4000 lb | 100% 24 ft 0 in | 360°

Pounds

Feet	Main boom length in feet 41.3	50	60	**70	80	90	100	110	120	128
8	++150,000 (73)									
9	++150,000 (71.5)	86,000 (75)								
10	142,500 (70)	86,000 (74)	86,000 (77)							
12	126,500 (67)	86,000 (71.5)	86,000 (75)	41,000 (77)						
15	108,000 (62)	86,000 (67.5)	86,000 (71.5)	41,000 (74.5)	39,000 (76.5)					
20	75,150 (53.5)	73,500 (61)	72,600 (66.5)	41,000 (70)	39,000 (73)	38,800 (75)	*38,700 (78)	*31,950 (78)		
25	47,700 (44)	47,750 (54)	47,300 (61)	41,000 (65.5)	39,000 (69)	38,800 (71.5)	38,700 (74)	31,950 (75.5)	*25,750 (78)	*14,600 (78)
30	33,200 (31)	33,400 (46.5)	33,400 (55.5)	33,100 (61)	34,150 (65)	35,250 (68.5)	36,150 (70.5)	31,950 (72.5)	25,750 (74.5)	14,600 (75.5)
35		24,550 (37)	24,700 (49.5)	24,650 (56.5)	25,550 (61)	26,550 (65)	28,050 (67.5)	28,100 (70)	25,750 (72)	14,600 (73)
40		18,550 (24)	18,750 (42)	18,850 (51)	19,750 (57)	20,650 (61)	21,700 (64.5)	21,950 (67.5)	22,150 (69.5)	14,600 (71)
45			14,450 (33.5)	14,550 (45.5)	15,550 (52.5)	16,400 (57.5)	17,250 (61.5)	17,550 (64.5)	17,850 (67)	14,600 (68.5)
50			11,150 (21.5)	11,350 (39)	12,250 (47.5)	13,150 (53.5)	13,900 (58)	14,250 (61.5)	14,600 (64.5)	14,600 (66)
55				8830 (31.5)	9720 (42.5)	10,550 (49.5)	11,350 (54.5)	11,700 (58.5)	12,100 (62)	12,700 (64)
60				6800 (20.5)	7650 (36.5)	8490 (45)	9320 (51)	9710 (55.5)	10,050 (59)	10,550 (61.5)
65					5960 (29)	6770 (40)	7660 (47)	8040 (52)	8430 (56)	8840 (59)
70					4540 (18.5)	5340 (34)	6220 (42.5)	6650 (48.5)	7050 (53)	7400 (56)
75						4120 (27.5)	5010 (38)	5440 (45)	5850 (50)	6200 (53.5)
80						3070 (17.5)	3970 (32.5)	4400 (41)	4810 (47)	5170 (50.5)
85							3080 (26)	3500 (36.5)	3910 (43)	4280 (47.5)
90							2300 (17)	2710 (31)	3110 (39.5)	3510 (44)
95								2020 (25)	2420 (35)	2810 (40.5)
100								1400 (16)	1790 (30)	2170 (36.5)
105									1240 (24)	1580 (32)
110										1050 (27)
Mimimum boom angle (°) for indicated length (no load).									23	26
Maximum boom length (ft) at 0° boom angle (no load).										110

#LMI operating code. Refer to LMI manual for instructions.
*This capacity is based upon maximum obtainable boom angle.
Note: ( ) Boom angles are in degrees.
++9 parts of line required to lift this capacity (using aux. boom nose). Refer to Operator's & Safety Handbook for reeving diagram

Lifting capacities at zero degree boom angle

Boom angle	Main boom length in feet 41.3	50	60	**70	80	90	100	110
0°	20,750 (34.1)	15,150 (42.8)	9680 (52.8)	5760 (63)	3850 (72.8)	2550 (82.8)	1900 (92.8)	1090 (102.8)

Note: ( ) Reference radii in feet.
**This boom length is with inner-mid fully extended and outer-mid & fly fully retracted.

A6-829-103754

THIS CHART IS ONLY A GUIDE AND SHOULD NOT BE USED TO OPERATE THE CRANE.
The individual crane's load chart, operating instructions and other instructional plates must be read and understood prior to operating the crane.

Load charts

41.3 ft - 128 ft | 33 ft - 56 ft | 4000 lb | 100% 24 ft 0 in | 360°

Feet	Pounds					
	33 ft LENGTH			56 ft LENGTH		
	0° OFFSET	20° OFFSET	40° OFFSET	0° OFFSET	20° OFFSET	40° OFFSET
35	*11,900 (78)					
40	11,900 (75.5)			6060 (77.5)		
45	11,900 (73.5)	*11,600 (78)		6060 (76)		
50	11,900 (71.5)	10,600 (75)	*9700 (78)	6060 (74.5)		
55	11,900 (70)	9770 (73)	8470 (75.5)	6060 (73)		
60	11,000 (68)	9020 (71)	7920 (73.5)	6060 (71)	*6040 (78)	
65	9930 (66)	8360 (69.5)	7430 (72)	6060 (69.5)	5900 (75)	
70	8440 (64)	7780 (67.5)	6980 (70)	6060 (68)	5730 (73.5)	*4930 (78)
75	7170 (62)	7260 (65.5)	6580 (68)	6060 (66)	5330 (71.5)	4640 (76)
80	6080 (60)	6790 (63.5)	6210 (65.5)	6040 (64.5)	4980 (70)	4370 (74)
85	5140 (58)	5870 (61)	5870 (63.5)	5570 (63)	4650 (68)	4120 (72)
90	4310 (55.5)	4970 (59)	5540 (61)	4900 (61)	4360 (66.5)	3890 (70)
95	3570 (53.5)	4180 (56.5)	4680 (59)	4160 (59.5)	4090 (64.5)	3680 (68.5)
100	2920 (51)	3480 (54.5)	3910 (56.5)	3470 (57.5)	3840 (62.5)	3480 (66.5)
105	2340 (48.5)	2830 (52)	3220 (54)	2850 (55.5)	3610 (60.5)	3300 (64.5)
110	1810 (46)	2250 (49.5)	2590 (51)	2300 (53.5)	3180 (58.5)	3130 (62.5)
115	1330 (43.5)	1720 (46.5)	2030 (48.5)	1820 (52)	2640 (56.5)	2970 (60)
120		1240 (44)	1520 (45)	1400 (49.5)	2150 (54.5)	2740 (58)
125				1020 (47.5)	1710 (52.5)	2200 (55.5)
130					1300 (50)	1700 (53)
135						1240 (50.5)
Minimum boom angle (°) for indicated length (no load)	40.5	42.5	43.5	46.5	48	49
Maximum boom length (ft) at 0° boom angle (no load)	80			70		

NOTE: ( ) Boom angles are in degrees. A6-829-103776
#LMI operating code. Refer to LMI manual for operating instructions.
*This capacity is based upon maximum boom angle.

NOTES:

1.All capacities above the bold line are based on structural strength of boom extension and do not exceed 85% of tipping loads, in accordance with SAE J-765.

2.The 33 ft extension length may be used with ingle or double part line lifting service. The 56 ft extension length may be used for single line lifting service only.

3.For main boom lengths less than 128 ft with the boom extension erected, the rated loads are determined by boom angle. Use only the column which corresponds to the boom extension length and offset for which the machine is set up. For boom angles not shown, use rating of th next lower boom angle.

4. WARNING: Operation of this machine with heavier loads than the capacities listed is strictly prohibited. Machine tipping with boom extension occurs rapidly and without advance warning.

5.Boom angle is the angle above or below horizontal of the longitudinal axis of the boom base section after lifting rated load.

6.Capacities listed are with outriggers properly extended and vertical jacks set only.

7.When lifting over the main boom nose with 33 ft or 56 ft extension erected, the outriggers must be fully extended or 50% extended (15 ft 5 in spread).

THIS CHART IS ONLY A GUIDE AND SHOULD NOT BE USED TO OPERATE THE CRANE.
The individual crane's load chart, operating instructions and other instructional plates must be read and understood prior to operating the crane.

41.3 ft - 128 ft | 56 ft | 20 ft- 40 ft | 4000 lb | 100% 24 ft 0 in | 360°

Pounds

Feet	76 ft (56 ft LENGTH + 1 INSERT) 0° OFFSET	20° OFFSET	40° OFFSET	96 ft (56 ft LENGTH + 2 INSERTS) 0° OFFSET	20° OFFSET	40° OFFSET
50	4850 (77.5)					
55	4850 (76)			3520 (78)		
60	4850 (74.5)			3520 (77)		
65	4850 (73)	*5290 (78)		3520 (75.5)		
70	4850 (71.5)	4860 (76.5)		3520 (74)		
75	4850 (70)	4470 (75)		3520 (72.5)	3740 (77)	
80	4730 (68.5)	4110 (73.5)	4050 (77)	3520 (71.5)	3420 (75.5)	
85	4310 (67)	3790 (72)	3500 (75.5)	3300 (70)	3100 (74.5)	*3250 (78)
90	3940 (65.5)	3500 (70)	3260 (73.5)	2970 (68.5)	2820 (73)	2720 (76)
95	3610 (63.5)	3240 (68.5)	3030 (72)	2660 (67)	2560 (71.5)	2490 (74.5)
100	3310 (62)	3000 (67)	2830 (70.5)	2390 (65.5)	2320 (70)	2270 (73)
105	3040 (60.5)	2770 (65)	2630 (68.5)	2140 (64)	2100 (68.5)	2070 (71.5)
110	2580 (59)	2570 (63.5)	2450 (66.5)	1920 (62.5)	1900 (67)	1890 (70)
115	2070 (57)	2370 (61.5)	2280 (65)	1710 (61)	1710 (65.5)	1710 (68.5)
120	1600 (55.5)	2200 (60)	2120 (63)	1320 (59.5)	1540 (64)	1550 (66.5)
125	1180 (53.5)	1970 (58)	1970 (61)		1380 (62.5)	1390 (65)
130		1510 (56.5)	1830 (59)		1230 (60.5)	1250 (63.5)
135		1090 (54.5)	1520 (57)			1110 (61.5)
140			1130 (55)			
Minimum boom angle (°) for indicated length (no load)	52.5	53	53.5	58	59	60.5
Maximum boom length (ft) at 0° boom angle (no load)		60			50	

NOTE: ( ) Boom angles are in degrees. A6-829-103790
#LMI operating code. Refer to LMI manual for operating instructions.
*This capacity is based upon maximum boom angle.

NOTES:

1.All capacities above the bold line are based on structural strength of boom extension and do not exceed 85% of tipping loads, in accordance with SAE J-765.

2.The 56 ft extension length may be used for single line lifting service only.

3.For main boom lengths less than 128 ft with the boom extension erected, the rated loads are determined by boom angle. Use only the column which corresponds to the boom extension length and offset for which the machine is set up. For boom angles not shown, use rating of the next lower boom angle.

4. WARNING: Operation of this machine with heavier loads than the capacities listed is strictly prohibited. Machine tipping with boom extension occurs rapidly and without advance warning.

5.Boom angle is the angle above or below horizontal of the longitudinal axis of the boom base section after lifting rated load.

6.Capacities listed are with outriggers properly extended and vertical jacks set only.

7.When lifting over the main boom nose with 56 ft extension erected and inserts, the outriggers must be fully extended and vertical jacks set.

THIS CHART IS ONLY A GUIDE AND SHOULD NOT BE USED TO OPERATE THE CRANE.
The individual crane's load chart, operating instructions and other instructional plates must be read and understood prior to operating the crane.

Load charts

41.3 ft - 128 ft | 0 lb | 100% 24 ft 0 in | 360°

Pounds

Feet	Main boom length in feet 41.3	50	60	**70	80	90	100	110	120	128
8	++150,000 (73)									
9	++150,000 (71.5)	86,000 (75)								
10	141,500 (70)	86,000 (74)	86,000 (77)							
12	125,500 (67)	86,000 (71.5)	86,000 (75)	41,000 (77)						
15	105,500 (62)	86,000 (67.5)	86,000 (71.5)	41,000 (74.5)	39,000 (76.5)					
20	68,500 (53.5)	66,950 (61)	66,050 (66.5)	41,000 (70)	39,000 (73)	38,800 (75)	*38,700 (78)	*31,950 (78)		
25	43,100 (44)	43,150 (54)	42,700 (61)	41,000 (65.5)	39,000 (69)	38,800 (71.5)	38,700 (74)	31,950 (75.5)	*25,750 (78)	*14,600 (78)
30	29,700 (31)	29,950 (46.5)	29,900 (55.5)	29,600 (61)	30,650 (65)	31,750 (68.5)	34,200 (70.5)	31,950 (72.5)	25,750 (74.5)	14,600 (75.5)
35		21,750 (37)	21,850 (49.5)	21,800 (56.5)	22,750 (61)	23,700 (65)	25,200 (67.5)	25,550 (70)	25,750 (72)	14,600 (73)
40		16,150 (24)	16,350 (42)	16,450 (51)	17,400 (57)	18,250 (61)	19,350 (64.5)	19,800 (67.5)	20,250 (69.5)	14,600 (71)
45			12,400 (33.5)	12,550 (45.5)	13,500 (52.5)	14,350 (57.5)	15,200 (61.5)	15,650 (64.5)	16,150 (67)	14,600 (68.5)
50			9390 (21.5)	9570 (39)	10,450 (47.5)	11,350 (53.5)	12,100 (58)	12,600 (61.5)	13,100 (64.5)	13,600 (66)
55				7230 (31.5)	8120 (42.5)	8990 (49.5)	9770 (54.5)	10,200 (58.5)	10,700 (62)	11,100 (64)
60				5360 (20.5)	6210 (36.5)	7050 (45)	7880 (51)	8330 (55.5)	8790 (59)	9130 (61.5)
65					4640 (29)	5460 (40)	6340 (47)	6780 (52)	7210 (56)	7520 (59)
70					3330 (18.5)	4130 (34)	5020 (42.5)	5480 (48.5)	5900 (53)	6200 (56)
75						3000 (27.5)	3900 (38)	4340 (45)	4760 (50)	5080 (53.5)
80						2030 (17.5)	2940 (32.5)	3370 (41)	3780 (47)	4110 (50.5)
85							2110 (26)	2520 (36.5)	2920 (43)	3260 (47.5)
90							1390 (17)	1780 (31)	2170 (39.5)	2510 (44)
95								1130 (25)	1500 (35)	1820 (40.5)
100										1220 (36.5)
Mimimum boom angle (°) for indicated length (no load).								24	29	35
Maximum boom length (ft) at 0° boom angle (no load).									100	

#LMI operating code. Refer to LMI manual for instructions.
*This capacity is based upon maximum obtainable boom angle.
Note: ( ) Boom angles are in degrees.
++9 parts of line required to lift this capacity (using aux. boom nose). Refer to Operator's & Safety Handbook for reeving diagram

Lifting capacities at zero degree boom angle

Boom angle	Main boom length in feet 41.3	50	60	**70	80	90	110
0°	20,750 (34.1)	13,750 (42.8)	8000 (52.8)	4390 (63)	2690 (72.8)	1550 (82.8)	1030 (92.8)

Note: ( ) Reference radii in feet.
**This boom length is with inner-mid fully extended and outer-mid & fly fully retracted.

A6-829-103755

THIS CHART IS ONLY A GUIDE AND SHOULD NOT BE USED TO OPERATE THE CRANE.
The individual crane's load chart, operating instructions and other instructional plates must be read and understood prior to operating the crane.

41.3 ft - 128 ft | 33 ft - 56 ft | 0 lb | 100% 24 ft 0 in | 360°

Feet	Pounds					
	33 ft LENGTH			56 ft LENGTH		
	0° OFFSET	20° OFFSET	40° OFFSET	0° OFFSET	20° OFFSET	40° OFFSET
35	*11,900 (78)					
40	11,900 (75.5)			6060 (77.5)		
45	11,900 (73.5)	*11,600 (78)		6060 (76)		
50	11,900 (71.5)	10,600 (75)	*9700 (78)	6060 (74.5)		
55	11,900 (70)	9770 (73)	8470 (75.5)	6060 (73)		
60	10,050 (68)	9020 (71)	7920 (73.5)	6060 (71)	*6040 (78)	
65	8410 (66)	8360 (69.5)	7430 (72)	6060 (69.5)	5900 (75)	
70	7010 (64)	7640 (67.5)	6980 (70)	6060 (68)	5730 (73.5)	*4930 (78)
75	5840 (62)	6460 (65.5)	6580 (68)	6030 (66)	5330 (71.5)	4640 (76)
80	4840 (60)	5440 (63.5)	6070 (65.5)	5110 (64.5)	4980 (70)	4370 (74)
85	3980 (58)	4560 (61)	5120 (63.5)	4310 (63)	4650 (68)	4120 (72)
90	3230 (55.5)	3780 (59)	4290 (61)	3610 (61)	4360 (66.5)	3890 (70)
95	2570 (53.5)	3100 (56.5)	3560 (59)	3000 (59.5)	4000 (64.5)	3680 (68.5)
100	1990 (51)	2490 (54.5)	2910 (56.5)	2440 (57.5)	3380 (62.5)	3480 (66.5)
105	1460 (48.5)	1940 (52)	2320 (54)	1950 (55.5)	2810 (60.5)	3300 (64.5)
110		1440 (49.5)	1740 (51)	1510 (53.5)	2310 (58.5)	2920 (62.5)
115			1220 (48.5)	1100 (52)	1850 (56.5)	2380 (60)
120					1430 (54.5)	1900 (58)
125					1040 (52.5)	1460 (55.5)
130						1020 (53)
Minimum boom angle (°) for indicated length (no load)	46	46.5	47.5	51	51.5	52
Maximum boom length (ft) at 0° boom angle (no load)		70			60	

NOTE: ( ) Boom angles are in degrees. A6-829-103777
#LMI operating code. Refer to LMI manual for operating instructions.
*This capacity is based upon maximum boom angle.

NOTES:

1.All capacities above the bold line are based on structural strength of boom extension and do not exceed 85% of tipping loads, in accordance with SAE J-765.

2.The 33 ft extension length may be used with single or double part line lifting service. The 56 ft extension length may be used for single line lifting service only.

3.For main boom lengths less than 128 ft with the boom extension erected, the rated loads are determined by boom angle. Use only the column which corresponds to the boom extension length and offset for which the machine is set up. For boom angles not shown, use rating of th next lower boom angle.

4. WARNING: Operation of this machine with heavier loads than the capacities listed is strictly prohibited. Machine tipping with boom extension occurs rapidly and without advance warning.

5.Boom angle is the angle above or below horizontal of the longitudinal axis of the boom base section after lifting rated load.

6.Capacities listed are with outriggers properly extended and vertical jacks set only.

7.When lifting over the main boom nose with 33 ft or 56 ft extension erected, the outriggers must be fully extended or 50% extended (15 ft 5 in spread).

THIS CHART IS ONLY A GUIDE AND SHOULD NOT BE USED TO OPERATE THE CRANE.
The individual crane's load chart, operating instructions and other instructional plates must be read and understood prior to operating the crane.

Load charts

41.3 ft - 128 ft	56 ft	20 ft - 40 ft	0	100% 24 ft 0 in	360°

Pounds

Feet	76 ft (56 ft LENGTH + 1 INSERT) 0° OFFSET	20° OFFSET	40° OFFSET	96 ft (56 ft LENGTH + 2 INSERTS) 0° OFFSET	20° OFFSET	40° OFFSET
50	4850 (77.5)					
55	4850 (76)			3520 (78)		
60	4850 (74.5)			3520 (77)		
65	4850 (73)	*5290 (78)		3520 (75.5)		
70	4850 (71.5)	4860 (76.5)		3520 (74)		
75	4850 (70)	4470 (75)		3520 (72.5)	3740 (77)	
80	4730 (68.5)	4110 (73.5)	4050 (77)	3520 (71.5)	3420 (75.5)	
85	4310 (67)	3790 (72)	3500 (75.5)	3300 (70)	3100 (74.5)	*3250 (78)
90	3700 (65.5)	3500 (70)	3260 (73.5)	2970 (68.5)	2820 (73)	2720 (76)
95	3100 (63.5)	3240 (68.5)	3030 (72)	2660 (67)	2560 (71.5)	2490 (74.5)
100	2560 (62)	3000 (67)	2830 (70.5)	2390 (65.5)	2320 (70)	2270 (73)
105	2080 (60.5)	2770 (65)	2630 (68.5)	1920 (64)	2100 (68.5)	2070 (71.5)
110	1640 (59)	2410 (63.5)	2450 (66.5)	1460 (62.5)	1900 (67)	1890 (70)
115	1240 (57)	1980 (61.5)	2280 (65)	1030 (61)	1710 (65.5)	1710 (68.5)
120		1580 (60)	2050 (63)		1490 (64)	1550 (66.5)
125		1210 (58)	1640 (61)		1080 (62.5)	1390 (65)
130			1260 (59)			1250 (63.5)
Minimum boom angle (°) for indicated length (no load)	55.5	56.5	57	60	61.5	61.5
Maximum boom length (ft) at 0° boom angle (no load)		60			50	

NOTE: ( ) Boom angles are in degrees. A6-829-103791
#LMI operating code. Refer to LMI manual for operating instructions.
*This capacity is based upon maximum boom angle.

NOTES:

1.All capacities above the bold line are based on structural strength of boom extension and do not exceed 85% of tipping loads, in accordance with SAE J-765.

2.The 56 ft extension length may be used for single line lifting service only.

3.For main boom lengths less than 128 ft with the boom extension erected, the rated loads are determined by boom angle. Use only the column which corresponds to the boom extension length and offset for which the machine is set up. For boom angles not shown, use rating of the next lower boom angle.

4. WARNING: Operation of this machine with heavier loads than the capacities listed is strictly prohibited. Machine tipping with boom extension occurs rapidly and without advance warning.

5.Boom angle is the angle above or below horizontal of the longitudinal axis of the boom base section after lifting rated load.

6.Capacities listed are with outriggers properly extended and vertical jacks set only.

7.When lifting over the main boom nose with 56 ft extension erected and inserts, the outriggers must be fully extended and vertical jacks set.

THIS CHART IS ONLY A GUIDE AND SHOULD NOT BE USED TO OPERATE THE CRANE.
The individual crane's load chart, operating instructions and other instructional plates must be read and understood prior to operating the crane.

Working range - Metric 85%

12,6 m - 39 m main boom + 10 m - 17 m lattice extension

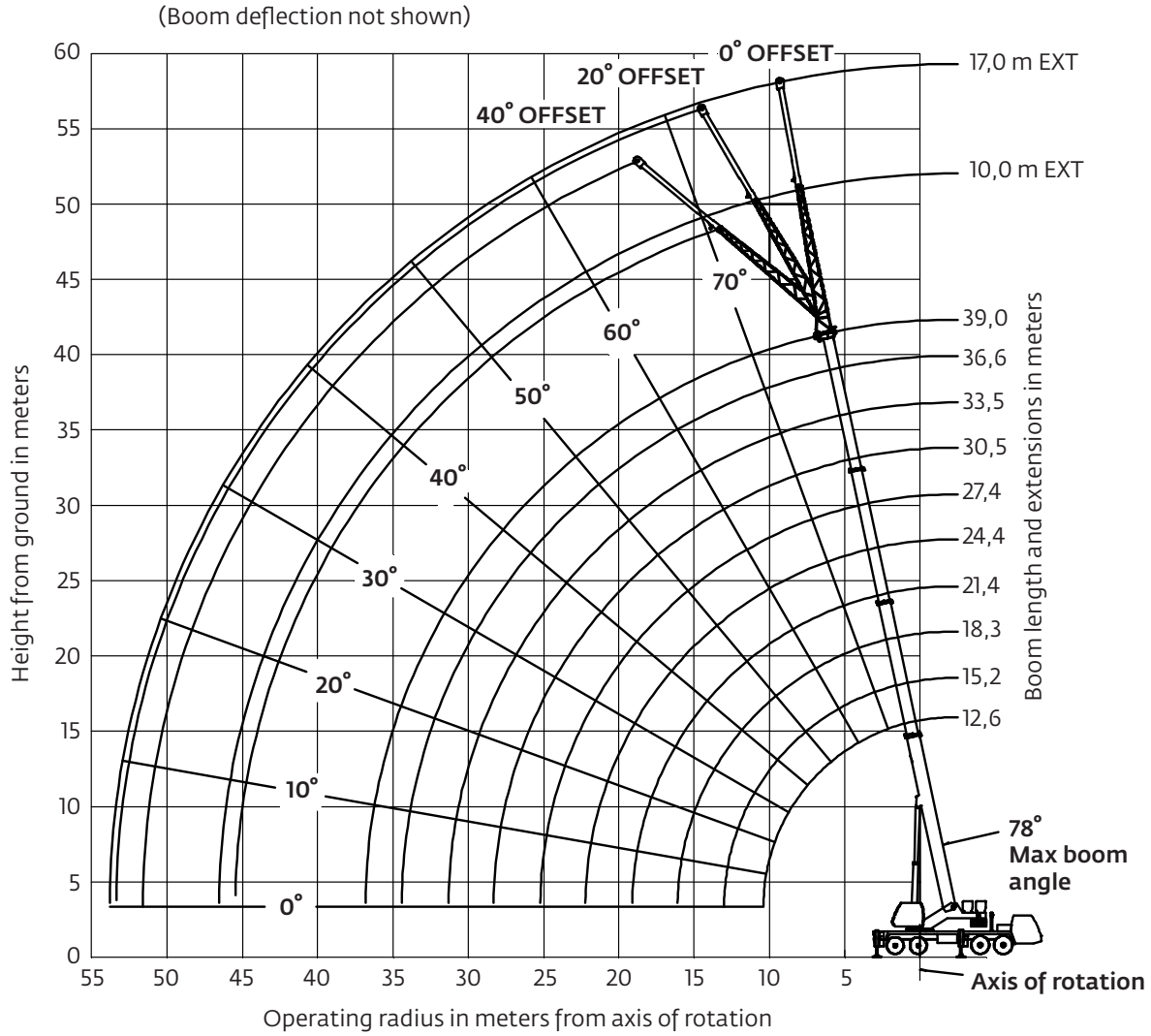

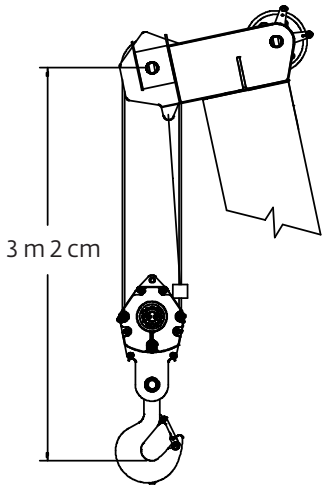

Dimensions are for largest Grove furnished hook block and overhaul ball, with anti-two block activated.

THIS CHART IS ONLY A GUIDE AND SHOULD NOT BE USED TO OPERATE THE CRANE.
The individual crane's load chart, operating instructions and other instructional plates must be read and understood prior to operating the crane.

Working range - Metric 85%

12,6 m - 39 m main boom + 10 m - 17 m lattice extension and two inserts

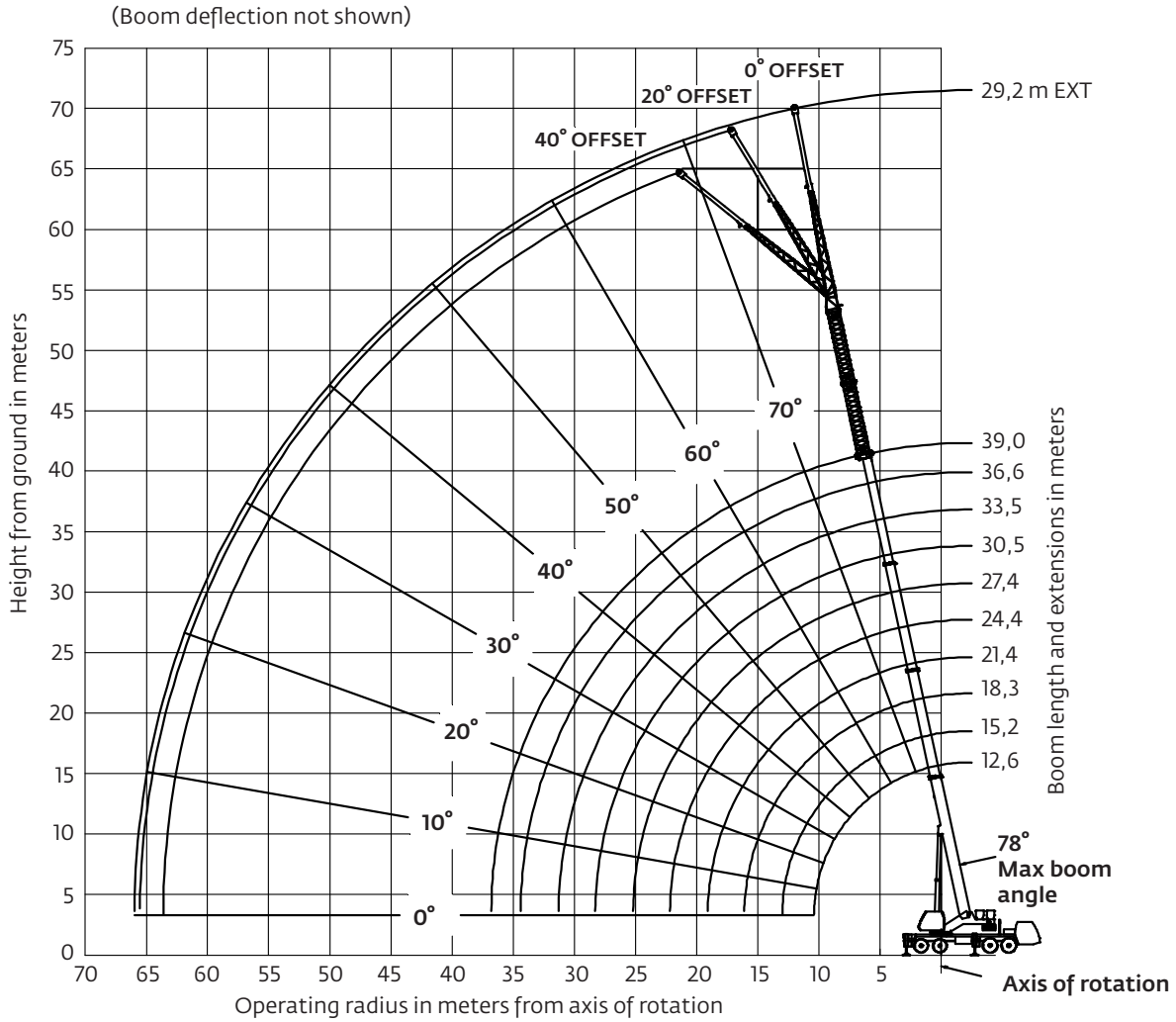

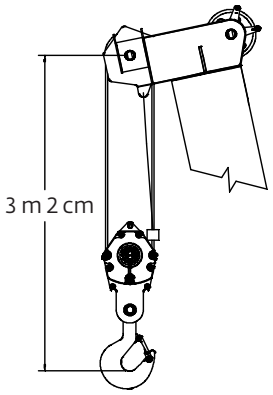

Dimensions are for largest Grove furnished hook block and overhaul ball, with anti-two block activated.

THIS CHART IS ONLY A GUIDE AND SHOULD NOT BE USED TO OPERATE THE CRANE.
The individual crane's load chart, operating instructions and other instructional plates must be read and understood prior to operating the crane.

Load charts - Metric 85%

12,6 m - 39,0 m | 10 886 kg | 100% 7,3 m | 360°

Radius in meters	#0601									
	Main boom length in meters									
	12,6	15,2	18,3	**21,4	24,4	27,4	30,5	33,5	36,6	39,0
2,5	++70 000 (73)									
3	+66 875 (70,5)	39 000 (74)	39 000 (77)							
3,5	61 125 (68)	39 000 (72)	39 000 (75,5)	18 575 (77,5)						
4	55 875 (65)	39 000 (70)	39 000 (73,5)	18 575 (76)	*17 675 (78)					
4,5	51 025 (62,5)	39 000 (68)	39 000 (72)	18 575 (75)	17 675 (77)					
5	47 350 (60)	39 000 (66)	38 975 (70,5)	18 575 (73,5)	17 675 (75,5)	*17 575 (78)				
6	40 375 (54,5)	39 000 (61,5)	38 950 (67)	18 575 (70,5)	17 675 (73)	17 575 (75,5)	*17 550 (78)			
7	34 375 (48)	33 950 (57)	33 925 (63,5)	18 575 (67,5)	17 675 (70,5)	17 575 (73)	17 550 (75)	*14 475 (78)	*11 675 (78)	
8	29 225 (41)	29 275 (52,5)	29 100 (60)	18 575 (64,5)	17 675 (68)	17 575 (71)	17 250 (73)	14 475 (74,5)	11 675 (76)	*6620 (78)
9	23 600 (32,5)	23 700 (47)	23 650 (56)	18 575 (61,5)	17 675 (65,5)	17 575 (68,5)	16 500 (71)	14 475 (73)	11 675 (74,5)	6620 (75,5)
10	14 625 (20)	19 650 (41,5)	19 700 (52)	18 575 (58,5)	17 450 (63)	16 400 (66,5)	15 150 (69)	13 800 (71)	11 675 (73)	6620 (74)
12		14 150 (26)	14 250 (43)	14 275 (52)	14 700 (57,5)	13 825 (61,5)	12 650 (65)	11 800 (67,5)	10 925 (69,5)	6620 (71)
14			10,725 (31,5)	10 800 (44,5)	11 225 (51,5)	11 600 (57)	10 825 (61)	10 075 (64)	9530 (66,5)	6620 (68)
16	See Note 16		5360 (10)	8355 (35,5)	8765 (45)	9170 (51,5)	9425 (56,5)	8720 (60)	8210 (63)	6620 (65)
18				6555 (23)	6945 (37,5)	7330 (46)	7700 (51,5)	7610 (56)	7145 (59,5)	6620 (62)
20					5545 (28)	5915 (39,5)	6300 (46,5)	6490 (51,5)	6275 (56)	5985 (58,5)
22					3010 (11)	4795 (31,5)	5185 (40,5)	5385 (47)	5540 (52)	5290 (55)
24						3880 (20,5)	4285 (34)	4480 (42)	4670 (47,5)	4690 (51)
26							3540 (25,5)	3735 (36)	3920 (43)	4095 (47)
28							2035 (11)	3105 (29)	3290 (38)	3460 (43)
30								2570 (19,5)	2750 (31,5)	2920 (38)
32									2290 (24)	2455 (32,5)
34									1330 (11,5)	2050 (25,5)
36										1695 (15)
Minimum boom angle (deg.) for indicated length (no load)										9
Maximum boom length (m) at 0 deg. boom angle (no load)										36,6

#LMI operating code. Refer to LMI manual for instructions.
*This capacity is based upon maximum obtainable boom angle.
Note: ( ) Boom angles are in degrees.
++9 parts of line of Flex-X35 cable only required to lift this capacity (using aux. boom nose).
+9 parts of line required to lift this capacity (using aux. boom nose). Refer to Operator's & Safety Handbook for reeving diagram.

Lifting capacities at zero degree boom angle										
Boom angle	Main boom length in meters									
	12,6	15,2	18,3	**21,4	24,4	27,4	30,5	33,5	36,6	
0°	9410 (10,4)	6870 (13)	4760 (16,1)	3035 (19,2)	2310 (22,2)	1765 (25,2)	1315 (28,3)	905 (31,3)	590 (34,4)	

Note: ( ) Reference radii in meters. A6-829-103905
**This boom length is with inner-mid fully extended and outer-mid & fly fully retracted.

THIS CHART IS ONLY A GUIDE AND SHOULD NOT BE USED TO OPERATE THE CRANE.
The individual crane's load chart, operating instructions and other instructional plates must be read and understood prior to operating the crane.

Load charts - Metric 85%

12,6 m - 39,0 m | 10,0 m - 17,0 m | 10 886 kg | 100% 7,3 m | 360°

Radius in meters	10,0 m LENGTH			17,0 m LENGTH		
	0° OFFSET	20° OFFSET	40° OFFSET	0° OFFSET	20° OFFSET	40° OFFSET
	#0621	#0622	#0623	#0641	#0642	#0643
10	*5395 (78)					
12	5395 (75,5)			*2745 (78)		
14	5395 (73)	5175 (76,5)		2745 (75,5)		
16	5395 (70,5)	4620 (74)	*4400 (78)	2745 (73,5)		
18	5065 (68)	4155 (71,5)	3640 (74)	2745 (71,5)	*2740 (78)	
20	4490 (65,5)	3760 (69)	3345 (71,5)	2745 (69,5)	2665 (75)	
22	4020 (63)	3420 (66,5)	3085 (69)	2745 (67)	2520 (72,5)	*2235 (78)
24	3620 (60,5)	3130 (64)	2855 (66)	2740 (65)	2295 (70,5)	2010 (74,5)
26	3275 (57,5)	2875 (61)	2650 (63,5)	2515 (63)	2100 (68)	1860 (72)
28	2 980 (55)	2655 (58)	2475 (60,5)	2270 (60,5)	1930 (65,5)	1725 (69,5)
30	2725 (51,5)	2455 (55)	2,310 (57)	2060 (58)	1775 (63)	1605 (67)
32	2500 (48,5)	2280 (52)	2,160 (54)	1870 (55,5)	1635 (60,5)	1495 (64,5)
34	2300 (45)	2120 (48,5)	2030 (50,5)	1710 (53)	1510 (58)	1,395 (61,5)
36	2000 (41,5)	1980 (45)	1915 (46,5)	1560 (50,5)	1400 (55,5)	1305 (58,5)
38	1675 (37.5)	1810 (41)		1430 (47,5)	1290 (52,5)	1220 (55,5)
40	1385 (33,5)	1495 (36,5)		1310 (45)	1200 (49,5)	1135 (52,5)
42	1,125 (28,5)	1210 (31,5)		1205 (41,5)	1115 (46,5)	1065 (49)
44	885 (22)			1110 (38)	1035 (43)	
46				925 (34,5)	960 (39)	
48				735 (30)	880 (34,5)	
50				560 (25)		
Minimum boom angle (°) for indicated length (no load)	13	28	43.5	19	31,5	46
Maximum boom length (m) at 0° boom angle (no load)	33,5			33,5		

NOTE: ( ) Boom angles are in degrees. A6-829-103907
#LMI operating code. Refer to LMI manual for operating instructions.
*This capacity is based upon maximum boom angle.

NOTES:

1.All capacities above the bold line are based on structural strength of boom extension and do not exceed 85% of tipping loads, in accordance with SAE J-765.

2.The 10,0 m and 17,0 m extension lengths may be used for single line lifting service only.

3.For main boom lengths less than 39,0 m with the boom extension erected, the rated loads are determined by boom angle. Use only the column which corresponds to the boom extension length and offset for which the machine is set up. For boom angles not shown, use rating of the next lower boom angle.

4. WARNING: Operation of this machine with heavier loads than the capacities listed is strictly prohibited. Machine tipping with boom extension occurs rapidly and without advance warning.

5.Boom angle is the angle above or below horizontal of the longitudinal axis of the boom base section after lifting rated load.

6.Capacities listed are with outriggers properly extended and vertical jacks set only.

7.When lifting over the main boom nose with 10,0 m or 17,0 m extension erected, the outriggers must be fully extended or 50% extended (4,7 m spread).

THIS CHART IS ONLY A GUIDE AND SHOULD NOT BE USED TO OPERATE THE CRANE.
The individual crane's load chart, operating instructions and other instructional plates must be read and understood prior to operating the crane.

Load charts - Metric 85%

12,6 m - 39,0 m | 10,0 m - 17,0 m | 6,1 m - 12,2 m | 10 886 kg | 100% 7,3 m | 360°

Radius in meters	23,1 m (17,0 m LENGTH + 1 INSERT)			29,2 m (17,0 m LENGTH + 2 INSERTS)		
	0° OFFSET	20° OFFSET	40° OFFSET	0° OFFSET	20° OFFSET	40° OFFSET
	#0684	#0685	#0686	#0684	#0685	#0686
16	2200 (77)					
18	2200 (75)			1595 (77)		
20	2200 (73)	*2400 (78)		1595 (75,5)		
22	2200 (71)	2125 (76)		1595 (73,5)	*1695 (78)	
24	2155 (69)	1905 (74)	*1835 (78)	1595 (71,5)	1585 (76)	
26	1945 (67)	1710 (71,5)	1580 (75,5)	1485 (70)	1395 (74)	*1470 (78)
28	1730 (65)	1540 (69,5)	1440 (73)	1295 (68)	1235 (72,5)	1195 (75,5)
30	1540 (62,5)	1395 (67,5)	1310 (71)	1120 (66)	1085 (70,5)	1060 (73,5)
32	1375 (60,5)	1255 (65)	1190 (68,5)	970 (64)	950 (68,5)	935 (71,5)
34	1230 (58,5)	1135 (63)	1085 (66)	840 (62)	835 (66,5)	830 (69,5)
36	1100 (56)	1025 (60,5)	985 (63,5)	720 (60)	725 (64,5)	730 (67,5)
38	985 (54)	925 (58,5)	895 (61)	615 (58)	630 (62,5)	635 (65)
40	880 (51,5)	835 (56)	815 (58,5)	520 (56)	540 (60)	550 (63)
42	785 (49)	745 (53,5)	735 (56)			
44	700 (46)	670 (50,5)	665 (53)			
46	620 (43)	595 (47,5)	595 (50)			
48	550 (40)	530 (44,5)	535 (46,5)			
Minimum boom angle (°) for indicated length (no load)	35	39	43.5	53.5	58	60.5
Maximum boom length (m) at 0° boom angle (no load)	21,4			21,4		

NOTE: ( ) Boom angles are in degrees. A6-829-10390 9
#LMI operating code. Refer to LMI manual for operating instructions.
*This capacity is based upon maximum boom angle.

NOTES:

1.All capacities above the bold line are based on structural strength of boom extension and do not exceed 85% of tipping loads, in accordance with SAE J-765.

2.The 17,0 m extension lengths may be used for single line lifting service only.

3.For main boom lengths less than 39,0 m with the boom extension erected, the rated loads are determined by boom angle. Use only the column which corresponds to the boom extension length and offset for which the machine is set up. For boom angles not shown, use rating of the next lower boom angle.

4. WARNING: Operation of this machine with heavier loads than the capacities listed is strictly prohibited. Machine tipping with boom extension occurs rapidly and without advance warning.

5.Boom angle is the angle above or below horizontal of the longitudinal axis of the boom base section after lifting rated load.

6.Capacities listed are with outriggers properly extended and vertical jacks set only.

7.When lifting over the main boom nose with 17,0 m extension erected and inserts, the outriggers must be fully extended or 50% extended and vertical jacks set.

Load charts - Metric 85%

12,6 m - 39,0 m | 8165 kg | 100% 7,3 m | 360°

Radius in meters	#0001									
	Main boom length in meters									
	12,6	15,2	18,3	**21,4	24,4	27,4	30,5	33,5	36,6	39,0
2,5	++70 000 (73)									
3	+66 875 (70,5)	39 000 (74)	39 000 (77)							
3,5	61 150 (68)	39 000 (72)	39 000 (75,5)	18 575 (77,5)						
4	55 975 (65)	39 000 (70)	39 000 (73,5)	18 575 (76)	*17 675 (78)					
4,5	51 225 (62,5)	39 000 (68)	39 000 (72)	18 575 (75)	17 675 (77)					
5	47 500 (60)	39 000 (66)	38 975 (70,5)	18 575 (73,5)	17 675 (75,5)	*17 575 (78)				
6	40 400 (54,5)	39 000 (61,5)	38 950 (67)	18 575 (70,5)	17 675 (73)	17 575 (75,5)	*17 550 (78)			
7	33 950 (48)	33 850 (57)	33 600 (63,5)	18 575 (67,5)	17 675 (70,5)	17 575 (73)	17 550 (75)	*14 475 (78)	*11 675 (78)	
8	26 375 (41)	26 450 (52,5)	26 275 (60)	18 575 (64,5)	17 675 (68)	17 575 (71)	17 250 (73)	14 475 (74,5)	11,675 (76)	*6620 (78)
9	21 225 (32,5)	21 300 (47)	21 250 (56)	18 575 (61,5)	17 675 (65,5)	17 575 (68,5)	16 500 (71)	14 475 (73)	11 675 (74,5)	6620 (75,5)
10	14 000 (20)	17 575 (41,5)	17 625 (52)	17 550 (58,5)	17 450 (63)	16 400 (66,5)	15 150 (69)	13 800 (71)	11 675 (73)	6620 (74)
12		12 550 (26)	12 625 (43)	12 675 (52)	13 075 (57,5)	13 500 (61,5)	12 650 (65)	11 800 (67,5)	10 925 (69,5)	6620 (71)
14	See Note 16		9405 (31,5)	9470 (44,5)	9905 (51,5)	10 275 (57)	10 650 (61)	10 075 (64)	9530 (66,5)	6620 (68)
16			5220 (10)	7230 (35.5)	7640 (45)	8040 (51, 5)	8385 (56,5)	8550 (60)	8210 (63)	6620 (65)
18				5575 (23)	5965 (37,5)	6350 (46)	6720 (51,5)	6890 (56)	7065 (59,5)	6620 (62)
20					4680 (28)	5045 (39,5)	5440 (46,5)	5625 (51,5)	5800 (56)	5980 (58,5)
22					2800 (11)	4015 (31,5)	4410 (40,5)	4610 (47)	4800 (52)	4955 (55)
24						3180 (20,5)	3580 (34)	3775 (42)	3965 (47,5)	4130 (51)
26							2900 (25,5)	3090 (36)	3275 (43)	3450 (47)
28							1795 (11)	2515 (29)	2695 (38)	2870 (43)
30								2025 (19,5)	2205 (31,5)	2370 (38)
32									1775 (24)	1945 (32,5)
34									1075 (11,5)	1570 (25,5)
36										1245 (15)
Minimum boom angle (deg.) for indicated length (no load)										9
Maximum boom length (m) at 0 deg. boom angle (no load)										36,6

#LMI operating code. Refer to LMI manual for instructions.
*This capacity is based upon maximum obtainable boom angle.
Note: ( ) Boom angles are in degrees.
++9 parts of line of Flex-X35 cable only required to lift this capacity (using aux. boom nose).
+9 parts of line required to lift this capacity (using aux. boom nose). Refer to Operator's & Safety Handbook for reeving diagram.

Lifting capacities at zero degree boom angle										
Boom angle	Main boom length in meters									
	12,6	15,2	18,3	**21,4	24,4	27,4	30,5	33,5	36,6	
0°	9430 (10,4)	6875 (13)	4770 (16,1)	3035 (19,2)	2310 (22,2)	1765 (25,2)	1315 (28,3)	905 (31,3)	590 (34,4)	

Note: ( ) Reference radii in meters.
**This boom length is with inner-mid fully extended and outer-mid & fly fully retracted.

A6-829-10381 3

THIS CHART IS ONLY A GUIDE AND SHOULD NOT BE USED TO OPERATE THE CRANE.
The individual crane's load chart, operating instructions and other instructional plates must be read and understood prior to operating the crane.

Load charts - Metric 85%

12,6 m - 39,0 m | 10,0 m - 17,0 m | 8165 kg | 100% 7,3 m | 360°

Radius in meters	10,0 m LENGTH			17,0 m LENGTH		
	0° OFFSET	20° OFFSET	40° OFFSET	0° OFFSET	20° OFFSET	40° OFFSET
	#0021	#0022	#0023	#0041	#0042	#0043
10	*5395 (78)					
12	5395 (75,5)			*2745 (78)		
14	5395 (73)	5175 (76,5)		2745 (75,5)		
16	5395 (70,5)	4620 (74)	*4400 (78)	2745 (73,5)		
18	5065 (68)	4155 (71,5)	3640 (74)	2745 (71,5)	*2740 (78)	
20	4490 (65,5)	3760 (69)	3345 (71,5)	2745 (69,5)	2665 (75)	
22	4020 (63)	3420 (66,5)	3085 (69)	2745 (67)	2520 (72,5)	*2235 (78)
24	3620 (60,5)	3130 (64)	2855 (66)	2740 (65)	2295 (70,5)	2010 (74,5)
26	3275 (57,5)	2875 (61)	2650 (63,5)	2515 (63)	2100 (68)	1860 (72)
28	2,980 (55)	2655 (58)	2475 (60,5)	2270 (60,5)	1930 (65,5)	1725 (69,5)
30	2720 (51,5)	2455 (55)	2310 (57)	2060 (58)	1775 (63)	1605 (67)
32	2275 (48,5)	2280 (52)	2160 (54)	1870 (55,5)	1635 (60,5)	1495 (64,5)
34	1890 (45)	2085 (48,5)	2030 (50,5)	1710 (53)	1510 (58)	1395 (61,5)
36	1550 (41,5)	1715 (45)	1845 (46,5)	1560 (50,5)	1400 (55,5)	1305 (58,5)
38	1245 (37,5)	1385 (41)		1430 (47,5)	1290 (52,5)	1220 (55,5)
40	975 (33,5)	1090 (36,5)		1225 (45)	1200 (49,5)	1135 (52,5)
42	730 (28,5)	830 (31,5)		995 (41,5)	1115 (46,5)	1065 (49)
44	510 (22)			785 (38)	980 (43)	
46				595 (34,5)	755 (39)	
48					555 (34,5)	
Minimum boom angle (°) for indicated length (no load)	20	28	43,5	30	31,5	46
Maximum boom length (m) at 0° boom angle (no load)	33,5			30,5		

NOTE: ( ) Boom angles are in degrees. A6-829-10383 3
#LMI operating code. Refer to LMI manual for operating instructions.
*This capacity is based upon maximum boom angle.

NOTES:

1.All capacities above the bold line are based on structural strength of boom extension and do not exceed 85% of tipping loads, in accordance with SAE J-765.

2.The 10,0 m and 17,0 m extension lengths may be used for single line lifting service only.

3.For main boom lengths less than 39,0 m with the boom extension erected, the rated loads are determined by boom angle. Use only the column which corresponds to the boom extension length and offset for which the machine is set up. For boom angles not shown, use rating of the next lower boom angle.

4. WARNING: Operation of this machine with heavier loads than the capacities listed is strictly prohibited. Machine tipping with boom extension occurs rapidly and without advance warning.

5.Boom angle is the angle above or below horizontal of the longitudinal axis of the boom base section after lifting rated load.

6.Capacities listed are with outriggers properly extended and vertical jacks set only.

7.When lifting over the main boom nose with 10,0 m or 17,0 m extension erected, the outriggers must be fully extended or 50% extended (4,7 m spread).

Load charts - Metric 85%

12,6 m - 39,0 m | 10,0 m - 17,0 m | 6,1 m - 12,2 m | 8165 kg | 100% 7,3 m | 360°

Radius in meters	23,1 m (17,0 m LENGTH + 1 INSERT)			29,2 m (17,0 m LENGTH + 2 INSERTS)		
	0° OFFSET	20° OFFSET	40° OFFSET	0° OFFSET	20° OFFSET	40° OFFSET
	#0084	#0085	#0086	#0084	#0085	#0086
16	2200 (77)					
18	2200 (75)			1595 (77)		
20	2200 (73)	*2400 (78)		1595 (75,5)		
22	2200 (71)	2125 (76)		1595 (73,5)	*1695 (78)	
24	2155 (69)	1905 (74)	*1835 (78)	1595 (71,5)	1585 (76)	
26	1945 (67)	1710 (71,5)	1580 (75,5)	1485 (70)	1395 (74)	*1470 (78)
28	1730 (65)	1540 (69,5)	1440 (73)	1295 (68)	1235 (72,5)	1195 (75,5)
30	1540 (62,5)	1395 (67,5)	1310 (71)	1120 (66)	1085 (70,5)	1060 (73,5)
32	1375 (60,5)	1255 (65)	1190 (68,5)	970 (64)	950 (68,5)	935 (71,5)
34	1230 (58,5)	1135 (63)	1085 (66)	840 (62)	835 (66,5)	830 (69,5)
36	1100 (56)	1025 (60,5)	985 (63,5)	720 (60)	725 (64,5)	730 (67,5)
38	985 (54)	925 (58,5)	895 (61)	615 (58)	630 (62,5)	635 (65)
40	880 (51,5)	835 (56)	815 (58,5)	520 (56)	540 (60)	550 (63)
42	785 (49)	745 (53,5)	735 (56)			
44	700 (46)	670 (50,5)	665 (53)			
46	620 (43)	595 (47,5)	595 (50)			
48		530 (44,5)	535 (46,5)			
Minimum boom angle (°) for indicated length (no load)	39	40,5	43,5	53,5	58	60,5
Maximum boom length (m) at 0° boom angle (no load)	21,4			21,4		

NOTE: ( ) Boom angles are in degrees. A6-829-10384 7
#LMI operating code. Refer to LMI manual for operating instructions.
*This capacity is based upon maximum boom angle.

NOTES:

1.All capacities above the bold line are based on structural strength of boom extension and do not exceed 85% of tipping loads, in accordance with SAE J-765.

2.The 17,0 m extension lengths may be used for single line lifting service only.

3.For main boom lengths less than 39,0 m with the boom extension erected, the rated loads are determined by boom angle. Use only the column which corresponds to the boom extension length and offset for which the machine is set up. For boom angles not shown, use rating of the next lower boom angle.

4. WARNING: Operation of this machine with heavier loads than the capacities listed is strictly prohibited. Machine tipping with boom extension occurs rapidly and without advance warning.

5.Boom angle is the angle above or below horizontal of the longitudinal axis of the boom base section after lifting rated load.

6.Capacities listed are with outriggers properly extended and vertical jacks set only.

7.When lifting over the main boom nose with 17,0 m extension erected and inserts, the outriggers must be fully extended or 50% extended and vertical jacks set.

THIS CHART IS ONLY A GUIDE AND SHOULD NOT BE USED TO OPERATE THE CRANE.
The individual crane's load chart, operating instructions and other instructional plates must be read and understood prior to operating the crane.

Load charts - Metric 85%

12,6 m - 39,0 m | 6350 kg | 100% 7,3 m | 360°

Radius in meters	#0101									
	Main boom length in meters									
	12,6	15,2	18,3	**21,4	24,4	27,4	30,5	33,5	36,6	39,0
2,5	+68 025 (73)									
3	66 425 (70,5)	39 000 (74)	39 000 (77)							
3,5	60 625 (68)	39 000 (72)	39 000 (75,5)	18 575 (77,5)						
4	55 500 (65)	39 000 (70)	39 000 (73,5)	18 575 (76)	*17 675 (78)					
4,5	50 775 (62,5)	39 000 (68)	39 000 (72)	18 575 (75)	17 675 (77)					
5	46 875 (60)	38 850 (66)	38 825 (70,5)	18 575 (73,5)	17 675 (75,5)	*17 575 (78)				
6	39 250 (54,5)	38 525 (61,5)	38 450 (67)	18 575 (70,5)	17 675 (73)	17 575 (75,5)	*17 550 (78)			
7	31 575 (48)	31 475 (57)	31 225 (63,5)	18 575 (67,5)	17 675 (70,5)	17 575 (73)	17 550 (75)	*14 475 (78)	*11 675 (78)	
8	24 450 (41)	24 525 (52,5)	24 350 (60)	18 575 (64,5)	17 675 (68)	17 575 (71)	17 250 (73)	14 475 (74,5)	11 675 (76)	*6620 (78)
9	19 600 (32,5)	19 700 (47)	19 650 (56)	18 575 (61,5)	17 675 (65,5)	17 575 (68,5)	16 500 (71)	14 475 (73)	11 675 (74,5)	6620 (75,5)
10	13 525 (20)	16 175 (41,5)	16 225 (52)	16 150 (58,5)	16 600 (63)	16 400 (66,5)	15 150 (69)	13 800 (71)	11 675 (73)	6620 (74)
12		11 450 (26)	11 525 (43)	11 575 (52)	11 975 (57,5)	12 400 (61,5)	12 650 (65)	11 800 (67,5)	10 925 (69,5)	6620 (71)
14			8500 (31.5)	8570 (44,5)	9005 (51,5)	9390 (57)	9765 (61)	9915 (64)	9530 (66,5)	6620 (68)
16	See Note 16		5145 (10)	6465 (35,5)	6870 (45)	7275 (51 ,5)	7620 (56,5)	7785 (60)	7950 (63)	6620 (65)
18				4910 (23)	5300 (37,5)	5680 (46)	6050 (51,5)	6225 (56)	6400 (59,5)	6620 (62)
20					4090 (28)	4460 (39,5)	4850 (46,5)	5035 (51,5)	5215 (56)	5395 (58,5)
22					2700 (11)	3490 (31,5)	3885 (40,5)	4080 (47)	4270 (52)	4430 (55)
24						2700 (20,5)	3105 (34)	3300 (42)	3490 (47,5)	3650 (51)
26							2460 (25,5)	2655 (36)	2840 (43)	3015 (47)
28							1680 (11)	2110 (29)	2295 (38)	2470 (43)
30								1650 (19,5)	1830 (31,5)	2000 (38)
32									1430 (24)	1600 (32.5)
34									950 (11,5)	1250 (25,5)
36										940 (15)
Minimum boom angle (deg.) for indicated length (no load)										9
Maximum boom length (m) at 0 deg. boom angle (no load)										36,6

#LMI operating code. Refer to LMI manual for instructions.
*This capacity is based upon maximum obtainable boom angle.
Note: ( ) Boom angles are in degrees.
+9 parts of line required to lift this capacity (using aux. boom nose). Refer to Operator's & Safety Handbook for reeving diagram.

Lifting capacities at zero degree boom angle										
Boom angle	Main boom length in meters									
	12,6	15,2	18,3	**21,4	24,4	27,4	30,5	33,5	36,6	
0°	9430 (10,4)	6875 (13)	4770 (16,1)	3035 (19,2)	2310 (22,2)	1765 (25,2)	1315 (28,3)	905 (31,3)	590 (34,4)	

Note: ( ) Reference radii in meters.
**This boom length is with inner-mid fully extended and outer-mid & fly fully retracted.

A6-829-10381 4

THIS CHART IS ONLY A GUIDE AND SHOULD NOT BE USED TO OPERATE THE CRANE.
The individual crane's load chart, operating instructions and other instructional plates must be read and understood prior to operating the crane.

Load charts - Metric 85%

12,6 m - 39,0 m | 10,0 m - 17,0 m | 6350 kg | 100% 7,3 m | 360°

Radius in meters	10,0 m LENGTH			17,0 m LENGTH		
	0° OFFSET	20° OFFSET	40° OFFSET	0° OFFSET	20° OFFSET	40° OFFSET
	#0121	#0122	#0123	#0141	#0142	#0143
10	*5395 (78)					
12	5395 (75,5)			*2745 (78)		
14	5395 (73)	5175 (76,5)		2,745 (75,5)		
16	5395 (70,5)	4620 (74)	*4400 (78)	2745 (73,5)		
18	5065 (68)	4155 (71,5)	3640 (74)	2745 (71,5)	*2740 (78)	
20	4490 (65,5)	3760 (69)	3345 (71,5)	2745 (69,5)	2665 (75)	
22	4020 (63)	3420 (66,5)	3085 (69)	2745 (67)	2520 (72,5)	*2235 (78)
24	3620 (60,5)	3130 (64)	2855 (66)	2740 (65)	2295 (70,5)	2010 (74.5)
26	3275 (57,5)	2875 (61)	2650 (63,5)	2515 (63)	2100 (68)	1860 (72)
28	2,830 (55)	2655 (58)	2475 (60,5)	2270 (60,5)	1930 (65,5)	1725 (69,5)
30	2345 (51,5)	2455 (55)	2310 (57)	2060 (58)	1775 (63)	1605 (67)
32	1930 (48,5)	2,155 (52)	2160 (54)	1870 (55,5)	1635 (60,5)	1495 (64,5)
34	1565 (45)	1755 (48,5)	1910 (50,5)	1710 (53)	1510 (58)	1395 (61,5)
36	1245 (41,5)	1410 (45)	1540 (46,5)	1470 (50,5)	1400 (55,5)	1305 (58,5)
38	955 (37,5)	1100 (41)		1195 (47,5)	1290 (52,5)	1220 (55,5)
40	700 (33,5)	820 (36,5)		955 (45)	1200 (49,5)	1135 (52,5)
42		570 (31,5)		735 (41,5)	965 (46,5)	1065 (49)
44				540 (38)	735 (43)	
46					520 (39)	
Minimum boom angle (°) for indicated length (no load)	26,5	28,5	43,5	35	36	46
Maximum boom length (m) at 0° boom angle (no load)	33,5			27,4		

NOTE: ( ) Boom angles are in degrees. A6-829-10383 4
#LMI operating code. Refer to LMI manual for operating instructions.
*This capacity is based upon maximum boom angle.

NOTES:

1.All capacities above the bold line are based on structural strength of boom extension and do not exceed 85% of tipping loads, in accordance with SAE J-765.

2.The 10,0 m and 17,0 m extension lengths may be used for single line lifting service only.

3.For main boom lengths less than 39,0 m with the boom extension erected, the rated loads are determined by boom angle. Use only the column which corresponds to the boom extension length and offset for which the machine is set up. For boom angles not shown, use rating of the next lower boom angle.

4. WARNING: Operation of this machine with heavier loads than the capacities listed is strictly prohibited. Machine tipping with boom extension occurs rapidly and without advance warning.

5.Boom angle is the angle above or below horizontal of the longitudinal axis of the boom base section after lifting rated load.

6.Capacities listed are with outriggers properly extended and vertical jacks set only.

7.When lifting over the main boom nose with 10,0 m or 17,0 m extension erected, the outriggers must be fully extended or 50% extended (4,7 m spread).

THIS CHART IS ONLY A GUIDE AND SHOULD NOT BE USED TO OPERATE THE CRANE.
The individual crane's load chart, operating instructions and other instructional plates must be read and understood prior to operating the crane.

Load charts - Metric 85%

12,6 m - 39,0 m | 10,0 m - 17,0 m | 6,1 m - 12,2 m | 6350 kg | 100% 7,3 m | 360°

Radius in meters	23,1 m (17,0 m LENGTH + 1 INSERT)			29,2 m (17,0 m LENGTH + 2 INSERTS)		
	0° OFFSET	20° OFFSET	40° OFFSET	0° OFFSET	20° OFFSET	40° OFFSET
	#0184	#0185	#0186	#0184	#0185	#0186
16	2200 (77)					
18	2200 (75)			1595 (77)		
20	2200 (73)	*2400 (78)		1595 (75,5)		
22	2200 (71)	2125 (76)		1595 (73,5)	*1695 (78)	
24	2155 (69)	1905 (74)	*1835 (78)	1595 (71,5)	1585 (76)	
26	1945 (67)	1710 (71,5)	1580 (75,5)	1485 (70)	1395 (74)	*1470 (78)
28	1730 (65)	1540 (69,5)	1440 (73)	1295 (68)	1235 (72,5)	1195 (75,5)
30	1540 (62,5)	1395 (67,5)	1310 (71)	1120 (66)	1085 (70,5)	1060 (73,5)
32	1375 (60,5)	1255 (65)	1190 (68,5)	970 (64)	950 (68,5)	935 (71,5)
34	1230 (58,5)	1135 (63)	1085 (66)	840 (62)	835 (66,5)	830 (69,5)
36	1100 (56)	1025 (60,5)	985 (63,5)	720 (60)	725 (64,5)	730 (67,5)
38	985 (54)	925 (58,5)	895 (61)	615 (58)	630 (62,5)	635 (65)
40	880 (51,5)	835 (56)	815 (58,5)	520 (56)	540 (60)	550 (63)
42	785 (49)	745 (53,5)	735 (56)			
44	590 (46)	670 (50,5)	665 (53)			
46		595 (47,5)	595 (50)			
48			535 (46,5)			
Minimum boom angle (°) for indicated length (no load)	43,5	44,5	44	53,5	58	60,5
Maximum boom length (m) at 0° boom angle (no load)	21,4			18,3		

NOTE: ( ) Boom angles are in degrees. A6-829-10384 8
#LMI operating code. Refer to LMI manual for operating instructions.
*This capacity is based upon maximum boom angle.

NOTES:

1.All capacities above the bold line are based on structural strength of boom extension and do not exceed 85% of tipping loads, in accordance with SAE J-765.

2.The 17,0 m extension lengths may be used for single line lifting service only.

3.For main boom lengths less than 39,0 m with the boom extension erected, the rated loads are determined by boom angle. Use only the column which corresponds to the boom extension length and offset for which the machine is set up. For boom angles not shown, use rating of the next lower boom angle.

4. WARNING: Operation of this machine with heavier loads than the capacities listed is strictly prohibited. Machine tipping with boom extension occurs rapidly and without advance warning.

5.Boom angle is the angle above or below horizontal of the longitudinal axis of the boom base section after lifting rated load.

6.Capacities listed are with outriggers properly extended and vertical jacks set only.

7.When lifting over the main boom nose with 17,0 m extension erected and inserts, the outriggers must be fully extended or 50% extended and vertical jacks set.

Load charts - Metric 85%

12,6 m - 39,0 m | 5445 kg | 100% 7,3 m | 360°

Radius in meters	#0201									
	Main boom length in meters									
	12,6	15,2	18,3	**21,4	24,4	27,4	30,5	33,5	36,6	39,0
2,5	+68 025 (73)									
3	66 200 (70,5)	39 000 (74)	39 000 (77)							
3,5	60 375 (68)	39 000 (72)	39 000 (75,5)	18 575 (77,5)						
4	55 275 (65)	39 000 (70)	39 000 (73,5)	18 575 (76)	*17 675 (78)					
4,5	50 575 (62,5)	39 000 (68)	39 000 (72)	18 575 (75)	17 675 (77)					
5	46 425 (60)	38 700 (66)	38 675 (70,5)	18 575 (73,5)	17 675 (75,5)	*17 575 (78)				
6	38 675 (54,5)	38 000 (61,5)	37 925 (67)	18 575 (70,5)	17 675 (73)	17 575 (75,5)	*17 550 (78)			
7	30 400 (48)	30 300 (57)	30 050 (63,5)	18 575 (67,5)	17 675 (70,5)	17 575 (73)	17 550 (75)	*14 475 (78)	*11 675 (78)	
8	23 500 (41)	23 550 (52,5)	23 375 (60)	18 575 (64,5)	17 675 (68)	17 575 (71)	17 250 (73)	14 475 (74,5)	11 675 (76)	*6620 (78)
9	18 800 (32,5)	18 875 (47)	18 825 (56)	18 575 (61,5)	17 675 (65,5)	17 575 (68,5)	16 500 (71)	14 475 (73)	11 675 (74,5)	6620 (75,5)
10	13 225 (20)	15 500 (41,5)	15 550 (52)	15 450 (58,5)	15 900 (63)	16 350 (66,5)	15 150 (69)	13 800 (71)	11 675 (73)	6620 (74)
12		10 900 (26)	10 975 (43)	11 025 (52)	11 450 (57,5)	11 850 (61,5)	12 350 (65)	11 800 (67,5)	10 925 (69,5)	6620 (71)
14			8050 (31,5)	8120 (44,5)	8555 (51,5)	8940 (57)	9315 (61)	9465 (64)	9530 (66,5)	6620 (68)
16	See Note 16		5095 (10)	6080 (35,5)	6490 (45)	6890 (51 ,5)	7235 (56,5)	7405 (60)	7570 (63)	6620 (65)
18				4575 (23)	4965 (37,5)	5350 (46)	5720 (51,5)	5895 (56)	6070 (59,5)	6295 (62)
20					3795 (28)	4165 (39,5)	4560 (46,5)	4745 (51,5)	4920 (56)	5100 (58,5)
22					2630 (11)	3225 (31,5)	3620 (40,5)	3820 (47)	4010 (52)	4165 (55)
24						2460 (20,5)	2865 (34)	3060 (42)	3250 (47,5)	3415 (51)
26							2245 (25,5)	2435 (36)	2620 (43)	2795 (47)
28							1600 (11)	1910 (29)	2095 (38)	2270 (43)
30								1465 (19,5)	1645 (31,5)	1815 (38)
32									1255 (24)	1425 (32,5)
34									865 (11.5)	1085 (25,5)
36										790 (15)
Minimum boom angle (deg.) for indicated length (no load)										9
Maximum boom length (m) at 0 deg. boom angle (no load)										36,6

#LMI operating code. Refer to LMI manual for instructions.
*This capacity is based upon maximum obtainable boom angle.
Note: ( ) Boom angles are in degrees.
+9 parts of line required to lift this capacity (using aux. boom nose). Refer to Operator's & Safety Handbook for reeving diagram.

Lifting capacities at zero degree boom angle										
Boom angle	Main boom length in meters									
	12,6	15,2	18,3	**21,4	24,4	27,4	30,5	33,5	36,6	
0°	9430 (10,4)	6875 (13)	4770 (16,1)	3035 (19,2)	2310 (22,2)	1765 (25,2)	1315 (28,3)	905 (31,3)	590 (34,4)	

Note: ( ) Reference radii in meters. A6-829-10381 5
**This boom length is with inner-mid fully extended and outer-mid & fly fully retracted.

THIS CHART IS ONLY A GUIDE AND SHOULD NOT BE USED TO OPERATE THE CRANE.
The individual crane's load chart, operating instructions and other instructional plates must be read and understood prior to operating the crane.

Load charts - Metric 85%

12,6 m - 39,0 m | 10,0 m - 17,0 m | 5445 kg | 100% 7,3 m | 360°

Radius in meters	10,0 m LENGTH			17,0 m LENGTH		
	0° OFFSET	20° OFFSET	40° OFFSET	0° OFFSET	20° OFFSET	40° OFFSET
	#0221	#0222	#0223	#0241	#0242	#0243
10	*5395 (78)					
12	5395 (75,5)			*2745 (78)		
14	5395 (73)	5175 (76,5)		2745 (75,5)		
16	5395 (70,5)	4620 (74)	*4400 (78)	2745 (73,5)		
18	5065 (68)	4155 (71,5)	3640 (74)	2745 (71,5)	*2740 (78)	
20	4490 (65,5)	3760 (69)	3345 (71,5)	2745 (69,5)	2665 (75)	
22	4020 (63)	3420 (66,5)	3085 (69)	2745 (67)	2520 (72,5)	*2235 (78)
24	3620 (60,5)	3130 (64)	2855 (66)	2740 (65)	2295 (70,5)	2010 (74,5)
26	3180 (57,5)	2875 (61)	2650 (63,5)	2515 (63)	2100 (68)	1860 (72)
28	2,630 (55)	2655 (58)	2475 (60,5)	2270 (60,5)	1930 (65,5)	1725 (69,5)
30	2160 (51.5)	2425 (55)	2310 (57)	2060 (58)	1775 (63)	1605 (67)
32	1755 (48,5)	1980 (52)	2155 (54)	1870 (55,5)	1635 (60,5)	1495 (64,5)
34	1400 (45)	1595 (48,5)	1745 (50,5)	1610 (53)	1510 (58)	1395 (61,5)
36	1090 (41,5)	1255 (45)	1385 (46,5)	1315 (50,5)	1400 (55.5)	1305 (58,5)
38	815 (37,5)	955 (41)		1050 (47,5)	1290 (52,5)	1220 (55,5)
40	565 (33,5)	685 (36,5)		820 (45)	1090 (49,5)	1135 (52,5)
42				605 (41,5)	835 (46.5)	970 (49)
44					610 (43)	
Minimum boom angle (°) for indicated length (no load)	30,5	32,5	43,5	38	39,5	46
Maximum boom length (m) at 0° boom angle (no load)	30,5			27,4		

NOTE: ( ) Boom angles are in degrees. A6-829-10383 5
#LMI operating code. Refer to LMI manual for operating instructions.
*This capacity is based upon maximum boom angle.

NOTES:

1.All capacities above the bold line are based on structural strength of boom extension and do not exceed 85% of tipping loads, in accordance with SAE J-765.

2.The 10,0 m and 17,0 m extension lengths may be used for single line lifting service only.

3.For main boom lengths less than 39,0 m with the boom extension erected, the rated loads are determined by boom angle. Use only the column which corresponds to the boom extension length and offset for which the machine is set up. For boom angles not shown, use rating of the next lower boom angle.

4. WARNING: Operation of this machine with heavier loads than the capacities listed is strictly prohibited. Machine tipping with boom extension occurs rapidly and without advance warning.

5.Boom angle is the angle above or below horizontal of the longitudinal axis of the boom base section after lifting rated load.

6.Capacities listed are with outriggers properly extended and vertical jacks set only.

7.When lifting over the main boom nose with 10,0 m or 17,0 m extension erected, the outriggers must be fully extended or 50% extended (4,7 m spread).

Load charts - Metric 85%

12,6 m - 39,0 m | 10,0 m - 17,0 m | 6,1 m - 12,2 m | 5445 kg | 100% 7,3 m | 360°

Radius in meters	23,1 m (17,0 m LENGTH + 1 INSERT)			29,2 m (17,0 m LENGTH + 2 INSERTS)		
	0° OFFSET	20° OFFSET	40° OFFSET	0° OFFSET	20° OFFSET	40° OFFSET
	#0284	#0285	#0286	#0284	#0285	#0286
16	2200 (77)					
18	2200 (75)			1595 (77)		
20	2200 (73)	*2400 (78)		1595 (75,5)		
22	2200 (71)	2125 (76)		1595 (73,5)	*1695 (78)	
24	2155 (69)	1905 (74)	*1835 (78)	1595 (71,5)	1585 (76)	
26	1945 (67)	1710 (71,5)	1580 (75,5)	1485 (70)	1395 (74)	*1470 (78)
28	1730 (65)	1540 (69,5)	1440 (73)	1295 (68)	1235 (72,5)	1195 (75,5)
30	1540 (62,5)	1395 (67,5)	1310 (71)	1120 (66)	1085 (70,5)	1060 (73,5)
32	1375 (60,5)	1255 (65)	1190 (68,5)	970 (64)	950 (68,5)	935 (71,5)
34	1230 (58,5)	1135 (63)	1085 (66)	840 (62)	835 (66,5)	830 (69,5)
36	1100 (56)	1025 (60,5)	985 (63,5)	720 (60)	725 (64,5)	730 (67,5)
38	985 (54)	925 (58,5)	895 (61)	615 (58)	630 (62,5)	635 (65)
40	880 (51,5)	835 (56)	815 (58,5)	520 (56)	540 (60)	550 (63)
42	665 (49)	745 (53,5)	735 (56)			
44		670 (50,5)	665 (53)			
46		500 (47,5)	595 (50)			
Minimum boom angle (°) for indicated length (no load)	46	46	46,5	53,5	58	60,5
Maximum boom length (m) at 0° boom angle (no load)	21,4			18,3		

NOTE: ( ) Boom angles are in degrees. A6-829-10384 9
#LMI operating code. Refer to LMI manual for operating instructions.
*This capacity is based upon maximum boom angle.

NOTES:

1.All capacities above the bold line are based on structural strength of boom extension and do not exceed 85% of tipping loads, in accordance with SAE J-765.

2.The 17,0 m extension lengths may be used for single line lifting service only.

3.For main boom lengths less than 39,0 m with the boom extension erected, the rated loads are determined by boom angle. Use only the column which corresponds to the boom extension length and offset for which the machine is set up. For boom angles not shown, use rating of the next lower boom angle.

4. WARNING: Operation of this machine with heavier loads than the capacities listed is strictly prohibited. Machine tipping with boom extension occurs rapidly and without advance warning.

5.Boom angle is the angle above or below horizontal of the longitudinal axis of the boom base section after lifting rated load.

6.Capacities listed are with outriggers properly extended and vertical jacks set only.

7.When lifting over the main boom nose with 17,0 m extension erected and inserts, the outriggers must be fully extended or 50% extended and vertical jacks set.

THIS CHART IS ONLY A GUIDE AND SHOULD NOT BE USED TO OPERATE THE CRANE.
The individual crane's load chart, operating instructions and other instructional plates must be read and understood prior to operating the crane.

Load charts - Metric 85%

12,6 m - 39,0 m | 4535 kg | 100% 7,3 m | 360°

Radius in meters	#0301									
	Main boom length in meters									
	12,6	15,2	18,3	**21,4	24,4	27,4	30,5	33,5	36,6	39,0
2,5	+68 025 (73)									
3	65 950 (70,5)	39 000 (74)	39 000 (77)							
3,5	60 125 (68)	39 000 (72)	39 000 (75,5)	18 575 (77,5)						
4	55 025 (65)	39 000 (70)	39 000 (73,5)	18 575 (76)	*17 675 (78)					
4,5	50 350 (62,5)	39 000 (68)	39 000 (72)	18 575 (75)	17 675 (77)					
5	45 725 (60)	38 550 (66)	38 525 (70,5)	18 575 (73,5)	17 675 (75,5)	*17 575 (78)				
6	38 100 (54,5)	37 475 (61,5)	37 375 (67)	18 575 (70,5)	17 675 (73)	17 575 (75,5)	*17 550 (78)			
7	29 200 (48)	29 100 (57)	28 850 (63,5)	18 575 (67,5)	17 675 (70,5)	17 575 (73)	17 550 (75)	*14 475 (78)	*11 675 (78)	
8	22 525 (41)	22 600 (52,5)	22 425 (60)	18 575 (64,5)	17 675 (68)	17 575 (71)	17 250 (73)	14 475 (74,5)	11 675 (76)	*6620 (78)
9	17 975 (32,5)	18 075 (47)	18 025 (56)	17 900 (61,5)	17 675 (65,5)	17 575 (68,5)	16 500 (71)	14 475 (73)	11 675 (74,5)	6620 (75,5)
10	12 925 (20)	14 800 (41,5)	14 850 (52)	14 750 (58,5)	15 200 (63)	15 650 (66,5)	15 150 (69)	13 800 (71)	11 675 (73)	6620 (74)
12		10 350 (26)	10 425 (43)	10 475 (52)	10 875 (57,5)	11 300 (61,5)	11 800 (65)	11 800 (67,5)	10 925 (69,5)	6620 (71)
14			7600 (31,5)	7665 (44,5)	8100 (51,5)	8490 (57)	8865 (61)	9010 (64)	9155 (66,5)	6620 (68)
16	See Note 16		5045 (10)	5695 (35,5)	6105 (45)	6505 (51, 5)	6850 (56,5)	7020 (60)	7185 (63)	6620 (65)
18				4240 (23)	4630 (37,5)	5015 (46)	5385 (51,5)	5560 (56)	5735 (59,5)	5960 (62)
20					3500 (28)	3870 (39,5)	4265 (46,5)	4445 (51,5)	4625 (56)	4805 (58,5)
22					2560 (11)	2960 (31,5)	3360 (40,5)	3555 (47)	3745 (52)	3900 (55)
24						2220 (20,5)	2630 (34)	2820 (42)	3010 (47,5)	3175 (51)
26							2025 (25,5)	2220 (36)	2405 (43)	2575 (47)
28							1520 (11)	1710 (29)	1895 (38)	2070 (43)
30								1280 (19,5)	1460 (31,5)	1630 (38)
32									1085 (24)	1255 (32,5)
34									755 (11,5)	925 (25,5)
36										640 (15)
Minimum boom angle (deg.) for indicated length (no load)										9
Maximum boom length (m) at 0 deg. boom angle (no load)										36,6

#LMI operating code. Refer to LMI manual for instructions.
*This capacity is based upon maximum obtainable boom angle.
Note: ( ) Boom angles are in degrees.
+9 parts of line required to lift this capacity (using aux. boom nose). Refer to Operator's & Safety Handbook for reeving diagram.

Lifting capacities at zero degree boom angle										
Boom angle	Main boom length in meters									
	12,6	15,2	18,3	**21,4	24,4	27,4	30,5	33,5	36,6	
0°	9430 (10,4)	6875 (13)	4770 (16,1)	3035 (19,2)	2310 (22,2)	1765 (25,2)	1315 (28,3)	905 (31,3)	590 (34,4)	

Note: ( ) Reference radii in meters. A6-829-10381 6
**This boom length is with inner-mid fully extended and outer-mid & fly fully retracted.

Load charts - Metric 85%

12,6 m - 39,0 m | 10,0 m - 17,0 m | 4535 kg | 100% 7,3 m | 360°

Radius in meters	10,0 m LENGTH			17,0 m LENGTH		
	0° OFFSET	20° OFFSET	40° OFFSET	0° OFFSET	20° OFFSET	40° OFFSET
	#0321	#0322	#0323	#0341	#0342	#0343
10	*5395 (78)					
12	5395 (75,5)			*2745 (78)		
14	5395 (73)	5175 (76,5)		2745 (75,5)		
16	5395 (70,5)	4620 (74)	*4400 (78)	2745 (73,5)		
18	5065 (68)	4155 (71,5)	3640 (74)	2745 (71,5)	*2740 (78)	
20	4490 (65,5)	3760 (69)	3345 (71,5)	2745 (69,5)	2665 (75)	
22	4020 (63)	3420 (66,5)	3085 (69)	2745 (67)	2520 (72,5)	*2235 (78)
24	3595 (60,5)	3130 (64)	2855 (66)	2740 (65)	2295 (70,5)	2010 (74,5)
26	2960 (57,5)	2875 (61)	2650 (63,5)	2515 (63)	2100 (68)	1860 (72)
28	2,430 (55)	2655 (58)	2475 (60,5)	2270 (60,5)	1930 (65,5)	1725 (69,5)
30	1975 (51,5)	2235 (55)	2310 (57)	2060 (58)	1775 (63)	1605 (67)
32	1580 (48,5)	1805 (52)	1980 (54)	1775 (55,5)	1635 (60,5)	1495 (64,5)
34	1240 (45)	1430 (48,5)	1580 (50,5)	1450 (53)	1510 (58)	1395 (61,5)
36	940 (41,5)	1100 (45)	1230 (46,5)	1160 (50,5)	1400 (55,5)	1305 (58,5)
38	670 (37,5)	810 (41)		910 (47,5)	1225 (52,5)	1220 (55,5)
40		545 (36,5)		680 (45)	950 (49,5)	1125 (52,5)
42					705 (46,5)	840 (49)
Minimum boom angle (°) for indicated length (no load)	33	34	43,5	40,5	41,5	46
Maximum boom length (m) at 0° boom angle (no load)	30,5			24,4		

NOTE: ( ) Boom angles are in degrees.
#LMI operating code. Refer to LMI manual for operating instructions.
*This capacity is based upon maximum boom angle.

A6-829-10383 6

NOTES:

1.All capacities above the bold line are based on structural strength of boom extension and do not exceed 85% of tipping loads, in accordance with SAE J-765.

2.The 10,0 m and 17,0 m extension lengths may be used for single line lifting service only.

3.For main boom lengths less than 39,0 m with the boom extension erected, the rated loads are determined by boom angle. Use only the column which corresponds to the boom extension length and offset for which the machine is set up. For boom angles not shown, use rating of the next lower boom angle.

4. WARNING: Operation of this machine with heavier loads than the capacities listed is strictly prohibited. Machine tipping with boom extension occurs rapidly and without advance warning.

5.Boom angle is the angle above or below horizontal of the longitudinal axis of the boom base section after lifting rated load.

6.Capacities listed are with outriggers properly extended and vertical jacks set only.

7.When lifting over the main boom nose with 10,0 m or 17,0 m extension erected, the outriggers must be fully extended or 50% extended (4,7 m spread).

THIS CHART IS ONLY A GUIDE AND SHOULD NOT BE USED TO OPERATE THE CRANE.
The individual crane's load chart, operating instructions and other instructional plates must be read and understood prior to operating the crane.

Load charts - Metric 85%

12,6 m - 39,0 m | 10,0 m - 17,0 m | 6,1 m - 12,2 m | 4535 kg | 100% 7,3 m | 360°

Radius in Meters	23,1 m (17,0 m LENGTH + 1 INSERT)			29,2 m (17,0 m LENGTH + 2 INSERTS)		
	0° OFFSET	20° OFFSET	40° OFFSET	0° OFFSET	20° OFFSET	40° OFFSET
	#0384	#0385	#0386	#0384	#0385	#0386
16	2200 (77)					
18	2200 (75)			1595 (77)		
20	2200 (73)	*2400 (78)		1595 (75,5)		
22	2200 (71)	2125 (76)		1595 (73,5)	*1695 (78)	
24	2155 (69)	1905 (74)	*1835 (78)	1595 (71.5)	1585 (76)	
26	1945 (67)	1710 (71.5)	1580 (75,5)	1485 (70)	1395 (74)	*1470 (78)
28	1730 (65)	1540 (69,5)	1440 (73)	1295 (68)	1235 (72,5)	1195 (75,5)
30	1540 (62,5)	1395 (67,5)	1310 (71)	1120 (66)	1085 (70,5)	1060 (73,5)
32	1375 (60,5)	1255 (65)	1190 (68,5)	970 (64)	950 (68,5)	935 (71,5)
34	1230 (58,5)	1135 (63)	1085 (66)	840 (62)	835 (66,5)	830 (69,5)
36	1100 (56)	1025 (60,5)	985 (63,5)	720 (60)	725 (64,5)	730 (67,5)
38	985 (54)	925 (58,5)	895 (61)	615 (58)	630 (62,5)	635 (65)
40	750 (51.5)	835 (56)	815 (58,5)	520 (56)	540 (60)	550 (63)
42	535 (49)	745 (53,5)	735 (56)			
44		585 (50,5)	665 (53)			
46			515 (50)			
Minimum boom angle (°) for indicated length (no load)	46,5	48	48	54	58	60,5
Maximum boom length (m) at 0° boom angle (no load)	21,4			18,3		

NOTE: ( ) Boom angles are in degrees. A6-829-10385 0
#LMI operating code. Refer to LMI manual for operating instructions.
*This capacity is based upon maximum boom angle.

NOTES:

1.All capacities above the bold line are based on structural strength of boom extension and do not exceed 85% of tipping loads, in accordance with SAE J-765.

2.The 17,0 m extension lengths may be used for single line lifting service only.

3.For main boom lengths less than 39,0 m with the boom extension erected, the rated loads are determined by boom angle. Use only the column which corresponds to the boom extension length and offset for which the machine is set up. For boom angles not shown, use rating of the next lower boom angle.

4. WARNING: Operation of this machine with heavier loads than the capacities listed is strictly prohibited. Machine tipping with boom extension occurs rapidly and without advance warning.

5.Boom angle is the angle above or below horizontal of the longitudinal axis of the boom base section after lifting rated load.

6.Capacities listed are with outriggers properly extended and vertical jacks set only.

7.When lifting over the main boom nose with 17,0 m extension erected and inserts, the outriggers must be fully extended or 50% extended and vertical jacks set.

Load charts - Metric 85%

12,6 m - 39,0 m | 3630 kg | 100% 7,3 m | 360°

Radius in meters	#0401									
	Main boom length in meters									
	12,6	15,2	18,3	**21,4	24,4	27,4	30,5	33,5	36,6	39,0
2,5	+68 025 (73)									
3	65 725 (70,5)	39 000 (74)	39 000 (77)							
3,5	59 875 (68)	39 000 (72)	39 000 (75,5)	18 575 (77,5)						
4	54 800 (65)	39 000 (70)	39 000 (73,5)	18 575 (76)	*17 675 (78)					
4,5	50 150 (62,5)	39 000 (68)	39 000 (72)	18 575 (75)	17 675 (77)					
5	45 225 (60)	38 375 (66)	38 350 (70,5)	18 575 (73,5)	17 675 (75,5)	*17 575 (78)				
6	37 700 (54,5)	36 950 (61,5)	36 850 (67)	18 575 (70,5)	17 675 (73)	17 575 (75,5)	*17 550 (78)			
7	28 025 (48)	27 925 (57)	27 675 (63,5)	18 575 (67,5)	17 675 (70,5)	17 575 (73)	17 550 (75)	*14 475 (78)	*11 675 (78)	
8	21 575 (41)	21 625 (52,5)	21 450 (60)	18 575 (64,5)	17 675 (68)	17 575 (71)	17 250 (73)	14 475 (74,5)	11 675 (76)	*6620 (78)
9	17 175 (32,5)	17 250 (47)	17 200 (56)	17 075 (61,5)	17 575 (65,5)	17 575 (68,5)	16 500 (71)	14 475 (73)	11 675 (74,5)	6620 (75,5)
10	12 625 (20)	14 100 (41,5)	14 150 (52)	14 050 (58,5)	14 500 (63)	14 950 (66,5)	15 150 (69)	13 800 (71)	11 675 (73)	6620 (74)
12		9810 (26)	9895 (43)	9940 (52)	10 350 (57,5)	10 750 (61,5)	11 250 (65)	11 350 (67,5)	10 925 (69,5)	6620 (71)
14			7150 (31,5)	7215 (44,5)	7650 (51,5)	8040 (57)	8415 (61)	8560 (64)	8705 (66,5)	6620 (68)
16	See Note 16		5000 (10)	5315 (35,5)	5725 (45)	6125 (51, 5)	6470 (56,5)	6635 (60)	6805 (63)	6620 (65)
18				3910 (23)	4300 (37,5)	4685 (46)	5055 (51,5)	5230 (56)	5405 (59,5)	5630 (62)
20					3205 (28)	3575 (39,5)	3970 (46,5)	4155 (51,5)	4330 (56)	4510 (58,5)
22					2340 (11)	2695 (31,5)	3095 (40,5)	3290 (47)	3480 (52)	3635 (55)
24						1985 (20,5)	2390 (34)	2585 (42)	2770 (47,5)	2935 (51)
26							1810 (25,5)	2000 (36)	2185 (43)	2360 (47)
28							1320 (11)	1510 (29)	1690 (38)	1870 (43)
30								1095 (19,5)	1270 (31,5)	1445 (38)
32									910 (24)	1080 (32,5)
34									595 (11,5)	765 (25,5)
Minimum boom angle (deg.) for indicated length (no load)										9
Maximum boom length (m) at 0 deg. boom angle (no load)										36,6

#LMI operating code. Refer to LMI manual for instructions.
*This capacity is based upon maximum obtainable boom angle.
Note: ( ) Boom angles are in degrees.
+9 parts of line required to lift this capacity (using aux. boom nose). Refer to Operator's & Safety Handbook for reeving diagram.

Lifting capacities at zero degree boom angle										
Boom angle	Main boom length in meters									
	12,6	15,2	18,3	**21,4	24,4	27,4	30,5	33,5	36,6	
0°	9430 (10,4)	6875 (13)	4770 (16,1)	3035 (19,2)	2265 (22,2)	1605 (25,2)	1260 (28,3)	850 (31,3)	540 (34,4)	

Note: ( ) Reference radii in meters.
**This boom length is with inner-mid fully extended and outer-mid & fly fully retracted.

A6-829-10381 7

THIS CHART IS ONLY A GUIDE AND SHOULD NOT BE USED TO OPERATE THE CRANE.
The individual crane's load chart, operating instructions and other instructional plates must be read and understood prior to operating the crane.

Load charts - Metric 85%

12,6 m - 39,0 m | 10,0 m - 17,0 m | 3630 kg | 100% 7,3 m | 360°

Radius in meters	10,0 m LENGTH			17,0 m LENGTH		
	0° OFFSET	20° OFFSET	40° OFFSET	0° OFFSET	20° OFFSET	40° OFFSET
	#0421	#0422	#0423	#0441	#0442	#0443
10	*5395 (78)					
12	5395 (75,5)			*2745 (78)		
14	5395 (73)	5175 (76,5)		2745 (75,5)		
16	5395 (70,5)	4620 (74)	*4400 (78)	2,745 (73,5)		
18	5065 (68)	4155 (71,5)	3640 (74)	2745 (71,5)	*2740 (78)	
20	4490 (65,5)	3760 (69)	3345 (71,5)	2745 (69,5)	2665 (75)	
22	4020 (63)	3420 (66,5)	3085 (69)	2745 (67)	2520 (72,5)	*2235 (78)
24	3355 (60,5)	3130 (64)	2855 (66)	2740 (65)	2295 (70,5)	2010 (74,5)
26	2740 (57,5)	2875 (61)	2650 (63,5)	2515 (63)	2100 (68)	1860 (72)
28	2225 (55)	2535 (58)	2475 (60,5)	2270 (60,5)	1930 (65,5)	1725 (69,5)
30	1790 (51,5)	2050 (55)	2250 (57)	1960 (58)	1775 (63)	1605 (67)
32	1410 (48,5)	1635 (52)	1805 (54)	1600 (55,5)	1635 (60,5)	1495 (64,5)
34	1075 (45)	1270 (48,5)	1420 (50,5)	1285 (53)	1,510 (58)	1395 (61,5)
36	785 (41,5)	950 (45)	1080 (46,5)	1010 (50,5)	1375 (55,5)	1305 (58,5)
38	525 (37,5)	665 (41)		765 (47,5)	1080 (52,5)	1220 (55,5)
40				545 (45)	815 (49,5)	990 (52,5)
42					580 (46,5)	710 (49)
Minimum boom angle (°) for indicated length (no load)	36,5	36,5	43,5	43	44	46
Maximum boom length (m) at 0° boom angle (no load)	27,4			24,4		

NOTE: ( ) Boom angles are in degrees. A6-829-10383 7
#LMI operating code. Refer to LMI manual for operating instructions.
*This capacity is based upon maximum boom angle.

NOTES:

1.All capacities above the bold line are based on structural strength of boom extension and do not exceed 85% of tipping loads, in accordance with SAE J-765.

2.The 10,0 m and 17,0 m extension lengths may be used for single line lifting service only.

3.For main boom lengths less than 39,0 m with the boom extension erected, the rated loads are determined by boom angle. Use only the column which corresponds to the boom extension length and offset for which the machine is set up. For boom angles not shown, use rating of the next lower boom angle.

4. WARNING: Operation of this machine with heavier loads than the capacities listed is strictly prohibited. Machine tipping with boom extension occurs rapidly and without advance warning.

5.Boom angle is the angle above or below horizontal of the longitudinal axis of the boom base section after lifting rated load.

6.Capacities listed are with outriggers properly extended and vertical jacks set only.

7.When lifting over the main boom nose with 10,0 m or 17,0 m extension erected, the outriggers must be fully extended or 50% extended (4,7 m spread).

Load charts - Metric 85%

12,6 m - 39,0 m | 10,0 m - 17,0 m | 6,1 m - 12,2 m | 3630 kg | 100% 7,3 m | 360°

Radius in meters	23,1 m (17,0 m LENGTH + 1 INSERT)			29,2 m (17,0 m LENGTH + 2 INSERTS)		
	0° OFFSET	20° OFFSET	40° OFFSET	0° OFFSET	20° OFFSET	40° OFFSET
	#0484	#0485	#0486	#0484	#0485	#0486
16	2200 (77)					
18	2200 (75)			1595 (77)		
20	2200 (73)	*2400 (78)		1595 (75.5)		
22	2200 (71)	2125 (76)		1595 (73.5)	*1695 (78)	
24	2155 (69)	1905 (74)	*1835 (78)	1595 (71.5)	1585 (76)	
26	1945 (67)	1710 (71.5)	1580 (75.5)	1485 (70)	1395 (74)	*1470 (78)
28	1730 (65)	1540 (69.5)	1440 (73)	1295 (68)	1235 (72.5)	1195 (75.5)
30	1540 (62.5)	1395 (67.5)	1310 (71)	1120 (66)	1085 (70.5)	1060 (73.5)
32	1375 (60.5)	1255 (65)	1190 (68.5)	970 (64)	950 (68.5)	935 (71.5)
34	1230 (58.5)	1135 (63)	1085 (66)	840 (62)	835 (66.5)	830 (69.5)
36	1095 (56)	1025 (60.5)	985 (63.5)	720 (60)	725 (64.5)	730 (67.5)
38	845 (54)	925 (58.5)	895 (61)	615 (58)	630 (62.5)	635 (65)
40	620 (51.5)	835 (56)	815 (58.5)	505 (56)	540 (60)	550 (63)
42		675 (53.5)	735 (56)			
44			610 (53)			
Minimum boom angle (°) for indicated length (no load)	48.5	50.5	50.5	55	58	60.5
Maximum boom length (m) at 0° boom angle (no load)	18.3			18.3		

NOTE: ( ) Boom angles are in degrees. A6-829-103851
#LMI operating code. Refer to LMI manual for operating instructions.
*This capacity is based upon maximum boom angle.

NOTES:

1.All capacities above the bold line are based on structural strength of boom extension and do not exceed 85% of tipping loads, in accordance with SAE J-765.

2.The 17,0 m extension lengths may be used for single line lifting service only.

3.For main boom lengths less than 39,0 m with the boom extension erected, the rated loads are determined by boom angle. Use only the column which corresponds to the boom extension length and offset for which the machine is set up. For boom angles not shown, use rating of the next lower boom angle.

4. WARNING: Operation of this machine with heavier loads than the capacities listed is strictly prohibited. Machine tipping with boom extension occurs rapidly and without advance warning.

5.Boom angle is the angle above or below horizontal of the longitudinal axis of the boom base section after lifting rated load.

6.Capacities listed are with outriggers properly extended and vertical jacks set only.

7.When lifting over the main boom nose with 17,0 m extension erected and inserts, the outriggers must be fully extended or 50% extended and vertical jacks set.

THIS CHART IS ONLY A GUIDE AND SHOULD NOT BE USED TO OPERATE THE CRANE.
The individual crane's load chart, operating instructions and other instructional plates must be read and understood prior to operating the crane.

Load charts - Metric 85%

12,6 m - 39,0 m | 1815 kg | 100% 7,3 m | 360°

Radius in meters	#0501									
	Main boom length in meters									
	12,6	15,2	18,3	**21,4	24,4	27,4	30,5	33,5	36,6	39,0
2,5	+68 025 (73)									
3	65 275 (70,5)	39 000 (74)	39 000 (77)							
3,5	59 375 (68)	39 000 (72)	39 000 (75,5)	18 575 (77,5)						
4	54 325 (65)	39 000 (70)	39 000 (73,5)	18 575 (76)	*17 675 (78)					
4,5	49 700 (62,5)	39 000 (68)	39 000 (72)	18 575 (75)	17 675 (77)					
5	44 850 (60)	38 075 (66)	38 050 (70,5)	18 575 (73,5)	17 675 (75,5)	*17 575 (78)				
6	35 225 (54,5)	34 450 (61,5)	34 050 (67)	18 575 (70,5)	17 675 (73)	17 575 (75,5)	*17 550 (78)			
7	25 650 (48)	25 550 (57)	25 300 (63,5)	18 575 (67,5)	17 675 (70,5)	17 575 (73)	17 550 (75)	*14 475 (78)	*11 675 (78)	
8	19 650 (41)	19 700 (52,5)	19 525 (60)	18 200 (64.5)	17 675 (68)	17 575 (71)	17 250 (73)	14 475 (74,5)	11 675 (76)	*6620 (78)
9	15 550 (32,5)	15 650 (47)	15 600 (56)	15 475 (61,5)	15 950 (65,5)	16 450 (68,5)	16 500 (71)	14 475 (73)	11 675 (74,5)	6620 (75,5)
10	12 050 (20)	12 700 (41,5)	12 750 (52)	12 650 (58,5)	13 100 (63)	13 550 (66,5)	14 400 (69)	13 800 (71)	11 675 (73)	6620 (74)
12		8710 (26)	8800 (43)	8845 (52)	9255 (57,5)	9660 (61,5)	10 150 (65)	10 250 (67,5)	10 350 (69,5)	6620 (71)
14			6245 (31,5)	6315 (44,5)	6750 (51,5)	7135 (57)	7515 (61)	7660 (64)	7805 (66,5)	6620 (68)
16	See Note 16		4460 (10)	4550 (35,5)	4955 (45)	5360 (51, 5)	5705 (56,5)	5870 (60)	6035 (63)	6345 (65)
18				3245 (23)	3635 (37,5)	4020 (46)	4390 (51,5)	4560 (56)	4735 (59,5)	4965 (62)
20					2615 (28)	2985 (39,5)	3385 (46,5)	3565 (51,5)	3740 (56)	3920 (58,5)
22					1810 (11)	2170 (31,5)	2570 (40,5)	2765 (47)	2955 (52)	3110 (55)
24						1505 (20,5)	1915 (34)	2105 (42)	2295 (47,5)	2455 (51)
26							1375 (25,5)	1565 (36)	1750 (43)	1920 (47)
28							920 (11)	1110 (29)	1290 (38)	1470 (43)
30								720 (19,5)	900 (31,5)	1075 (38)
32									560 (24)	715 (32,5)
Minimum boom angle (deg.) for indicated length (no load)								0	23	26
Maximum boom length (m) at 0 deg. boom angle (no load)								33,5		

#LMI operating code. Refer to LMI manual for instructions.
*This capacity is based upon maximum obtainable boom angle.
Note: ( ) Boom angles are in degrees.
+9 parts of line required to lift this capacity (using aux. boom nose). Refer to Operator's & Safety Handbook for reeving diagram.

Lifting capacities at zero degree boom angle										
Boom angle	Main boom length in meters									
	12,6	15,2	18,3	**21,4	24,4	27,4	30,5			
0°	9430 (10,4)	6875 (13)	4390 (16,1)	2610 (19,2)	1745 (22,2)	1155 (25,2)	865 (28,3)			

Note: ( ) Reference radii in meters.
**This boom length is with inner-mid fully extended and outer-mid & fly fully retracted.

A6-829-10381 8

THIS CHART IS ONLY A GUIDE AND SHOULD NOT BE USED TO OPERATE THE CRANE.
The individual crane's load chart, operating instructions and other instructional plates must be read and understood prior to operating the crane.

Load charts - Metric 85%

12,6 m - 39,0 m | 10,0 m - 17,0 m | 1815 kg | 100% 7,3 m | 360°

Radius in meters	10,0 m LENGTH			17,0 m LENGTH		
	0° OFFSET	20° OFFSET	40° OFFSET	0° OFFSET	20° OFFSET	40° OFFSET
	#0521	#0522	#0523	#0541	#0542	#0543
10	*5395 (78)					
12	5395 (75,5)			*2745 (78)		
14	5395 (73)	5175 (76,5)		2745 (75,5)		
16	5395 (70,5)	4620 (74)	*4400 (78)	2745 (73,5)		
18	5065 (68)	4155 (71,5)	3640 (74)	2745 (71,5)	*2740 (78)	
20	4415 (65,5)	3760 (69)	3345 (71,5)	2745 (69,5)	2665 (75)	
22	3565 (63)	3420 (66,5)	3085 (69)	2745 (67)	2520 (72,5)	*2235 (78)
24	2875 (60,5)	3130 (64)	2855 (66)	2740 (65)	2295 (70,5)	2010 (74,5)
26	2305 (57,5)	2635 (61)	2650 (63,5)	2515 (63)	2100 (68)	1860 (72)
28	1825 (55)	2115 (58)	2365 (60,5)	2095 (60,5)	1930 (65,5)	1725 (69,5)
30	1415 (51,5)	1675 (55)	1880 (57)	1670 (58)	1775 (63)	1605 (67)
32	1060 (48,5)	1285 (52)	1460 (54)	1290 (55,5)	1635 (60,5)	1495 (64,5)
34	750 (45)	945 (48,5)	1095 (50,5)	975 (53)	1365 (58)	1395 (61,5)
36		645 (45)	775 (46,5)	705 (50,5)	1060 (55,5)	1305 (58,5)
38					785 (52,5)	1015 (55,5)
40					545 (49,5)	720 (52,5)
Minimum boom angle (°) for indicated length (no load)	40,5	42,5	43,5	46,5	48	49
Maximum boom length (m) at 0° boom angle (no load)	24,4			21,4		

NOTE: ( ) Boom angles are in degrees.
#LMI operating code. Refer to LMI manual for operating instructions.
*This capacity is based upon maximum boom angle.

A6-829-10383 8

NOTES:

1.All capacities above the bold line are based on structural strength of boom extension and do not exceed 85% of tipping loads, in accordance with SAE J-765.

2.The 10,0 m and 17,0 m extension lengths may be used for single line lifting service only.

3.For main boom lengths less than 39,0 m with the boom extension erected, the rated loads are determined by boom angle. Use only the column which corresponds to the boom extension length and offset for which the machine is set up. For boom angles not shown, use rating of the next lower boom angle.

4. WARNING: Operation of this machine with heavier loads than the capacities listed is strictly prohibited. Machine tipping with boom extension occurs rapidly and without advance warning.

5.Boom angle is the angle above or below horizontal of the longitudinal axis of the boom base section after lifting rated load.

6.Capacities listed are with outriggers properly extended and vertical jacks set only.

7.When lifting over the main boom nose with 10,0 m or 17,0 m extension erected, the outriggers must be fully extended or 50% extended (4,7 m spread).

THIS CHART IS ONLY A GUIDE AND SHOULD NOT BE USED TO OPERATE THE CRANE.
The individual crane's load chart, operating instructions and other instructional plates must be read and understood prior to operating the crane.

Load charts - Metric 85%

12,6 m - 39,0 m | 10,0 m - 17,0 m | 6,1 m - 12,2 m | 1815 kg | 100% 7,3 m | 360°

Radius in meters	23,1 m (17,0 m LENGTH + 1 INSERT)			29,2 m (17,0 m LENGTH + 2 INSERTS)		
	0° OFFSET	20° OFFSET	40° OFFSET	0° OFFSET	20° OFFSET	40° OFFSET
	#0584	#0585	#0586	#0584	#0585	#0586
16	2200 (77)					
18	2200 (75)			1595 (77)		
20	2200 (73)	*2400 (78)		1595 (75,5)		
22	2200 (71)	2125 (76)		1595 (73,5)	*1695 (78)	
24	2155 (69)	1905 (74)	*1835 (78)	1595 (71,5)	1585 (76)	
26	1945 (67)	1710 (71,5)	1580 (75,5)	1485 (70)	1395 (74)	*1470 (78)
28	1730 (65)	1540 (69,5)	1440 (73)	1295 (68)	1235 (72,5)	1195 (75,5)
30	1540 (62,5)	1395 (67,5)	1310 (71)	1120 (66)	1085 (70,5)	1060 (73,5)
32	1375 (60,5)	1255 (65)	1190 (68,5)	970 (64)	950 (68,5)	935 (71,5)
34	1095 (58,5)	1135 (63)	1085 (66)	840 (62)	835 (66,5)	830 (69,5)
36	805 (56)	1025 (60,5)	985 (63,5)	665 (60)	725 (64,5)	730 (67,5)
38	545 (54)	910 (58,5)	895 (61)		630 (62,5)	635 (65)
40		635 (56)	815 (58,5)		540 (60)	550 (63)
42			590 (56)			
Minimum boom angle (°) for indicated length (no load)	52,5	53	53,5	58	59	60,5
Maximum boom length (m) at 0° boom angle (no load)	18,3			15,2		

NOTE: ( ) Boom angles are in degrees. A6-829-10385 2
#LMI operating code. Refer to LMI manual for operating instructions.
*This capacity is based upon maximum boom angle.

NOTES:

1.All capacities above the bold line are based on structural strength of boom extension and do not exceed 85% of tipping loads, in accordance with SAE J-765.

2.The 17,0 m extension lengths may be used for single line lifting service only.

3.For main boom lengths less than 39,0 m with the boom extension erected, the rated loads are determined by boom angle. Use only the column which corresponds to the boom extension length and offset for which the machine is set up. For boom angles not shown, use rating of the next lower boom angle.

4. WARNING: Operation of this machine with heavier loads than the capacities listed is strictly prohibited. Machine tipping with boom extension occurs rapidly and without advance warning.

5.Boom angle is the angle above or below horizontal of the longitudinal axis of the boom base section after lifting rated load.

6.Capacities listed are with outriggers properly extended and vertical jacks set only.

7.When lifting over the main boom nose with 17,0 m extension erected and inserts, the outriggers must be fully extended or 50% extended and vertical jacks set.

THIS CHART IS ONLY A GUIDE AND SHOULD NOT BE USED TO OPERATE THE CRANE.
The individual crane's load chart, operating instructions and other instructional plates must be read and understood prior to operating the crane.

Load charts - Metric 85%

12,6 m - 39,0 m | 0 kg | 100% 7,3 m | 360°

Radius in meters	#0801									
	Main boom length in leters									
	12,6	15,2	18,3	**21,4	24,4	27,4	30,5	33,5	36,6	39,0
2.5	+68 025 (73)									
3	64 800 (70.5)	39 000 (74)	39 000 (77)							
3.5	58 875 (68)	39 000 (72)	39 000 (75.5)	18 575 (77.5)						
4	53 650 (65)	39 000 (70)	39 000 (73.5)	18 575 (76)	*17 675 (78)					
4.5	48 725 (62.5)	39 000 (68)	39 000 (72)	18 575 (75)	17 675 (77)					
5	43 900 (60)	37 750 (66)	37 675 (70.5)	18 575 (73.5)	17 675 (75.5)	*17 575 (78)				
6	32 125 (54.5)	31 350 (61.5)	30 925 (67)	18 575 (70.5)	17 675 (73)	17 575 (75.5)	*17 550 (78)			
7	23,250 (48)	23 150 (57)	22 900 (63.5)	18 575 (67.5)	17 675 (70.5)	17 575 (73)	17 550 (75)	*14 475 (78)	*11 675 (78)	
8	17 700 (41)	17 775 (52.5)	17 600 (60)	17 425 (64.5)	17 225 (68)	17 275 (71)	17 250 (73)	14 475 (74.5)	11 675 (76)	*6620 (78)
9	13 925 (32.5)	14 025 (47)	13 975 (56)	13 850 (61.5)	14 325 (65.5)	14 825 (68.5)	16 025 (71)	14 475 (73)	11 675 (74.5)	6620 (75.5)
10	11 175 (20)	11 300 (41.5)	11 350 (52)	11 250 (58.5)	11 700 (63)	12 175 (66.5)	13 000 (69)	13 125 (71)	11 675 (73)	6620 (74)
12		7615 (26)	7700 (43)	7745 (52)	8155 (57.5)	8565 (61.5)	9065 (65)	9265 (67.5)	9465 (69.5)	6620 (71)
14			5345 (31.5)	5410 (44.5)	5845 (51.5)	6235 (57)	6610 (61)	6830 (64)	7045 (66.5)	6620 (68)
16	See Note16		3695 (10)	3780 (35.5)	4190 (45)	4590 (51. 5)	4935 (56.5)	5155 (60)	5370 (63)	5575 (65)
18				2575 (23)	2970 (37.5)	3350 (46)	3720 (51.5)	3930 (56)	4135 (59.5)	4295 (62)
20					2030 (28)	2395 (39.5)	2800 (46.5)	2995 (51.5)	3190 (56)	3330 (58.5)
22					1285 (11)	1640 (31.5)	2045 (40.5)	2250 (47)	2445 (52)	2580 (55)
24						1025 (20.5)	1440 (34)	1630 (42)	1820 (47.5)	1975 (51)
26							940 (25.5)	1125 (36)	1300 (43)	1455 (47)
28							520 (11)	695 (29)	865 (38)	1020 (43)
30										635 (38)
Minimum boom angle (deg.) for indicated length (no load)							0	24	29	35
Maximum boom length (m) at 0 deg. boom angle (no load)							30,5			

#LMI operating code. Refer to LMI manual for instructions.
*This capacity is based upon maximum obtainable boom angle.
Note: ( ) Boom angles are in degrees.
+9 parts of line required to lift this capacity (using aux. boom nose). Refer to Operator's & Safety Handbook for reeving diagram.

Lifting capacities at zero degree boom angle										
Boom angle	Main boom length in meters									
	12,6	15,2	18,3	**21,4	24,4	27,4				
0°	9430 (10,4)	6255 (13)	3630 (16,1)	1995 (19,2)	1220 (22,2)	700 (25,2)				

Note: ( ) Reference radii in meters.
**This boom length is with inner-mid fully extended and outer-mid & fly fully retracted.

A6-829-10381 9

THIS CHART IS ONLY A GUIDE AND SHOULD NOT BE USED TO OPERATE THE CRANE.
The individual crane's load chart, operating instructions and other instructional plates must be read and understood prior to operating the crane.

Load charts - Metric 85%

12,6 m - 39,0 m | 10,0 m - 17,0 m | 0 kg | 100% 7,3 m | 360°

Radius in meters	10,0 m LENGTH			17,0 m LENGTH		
	0° OFFSET	20° OFFSET	40° OFFSET	0° OFFSET	20° OFFSET	40° OFFSET
	#0821	#0822	#0823	#0841	#0842	#0843
10	*5395 (78)					
12	5395 (75,5)			*2745 (78)		
14	5395 (73)	5175 (76,5)		2745 (75,5)		
16	5395 (70,5)	4620 (74)	*4400 (78)	2745 (73,5)		
18	4740 (68)	4155 (71,5)	3640 (74)	2745 (71,5)	*2740 (78)	
20	3730 (65,5)	3760 (69)	3345 (71,5)	2745 (69,5)	2665 (75)	
22	2940 (63)	3225 (66,5)	3085 (69)	2745 (67)	2520 (72,5)	*2235 (78)
24	2305 (60,5)	2580 (64)	2855 (66)	2420 (65)	2295 (70,5)	2010 (74,5)
26	1785 (57,5)	2045 (61)	2300 (63.5)	1935 (63)	2100 (68)	1860 (72)
28	1350 (55)	1595 (58)	1820 (60,5)	1530 (60,5)	1930 (65,5)	1725 (69,5)
30	980 (51,5)	1210 (55)	1410 (57)	1185 (58)	1620 (63)	1605 (67)
32	665 (48,5)	880 (52)	1050 (54)	885 (55,5)	1275 (60,5)	1495 (64,5)
34		590 (48,5)	715 (50,5)	625 (53)	980 (58)	1245 (61.5)
36					720 (55,5)	940 (58,5)
38						675 (55,5)
Minimum boom angle (°) for indicated length (no load)	46	46,5	47,5	51	51,5	52
Maximum boom length (m) at 0° boom angle (no load)	21,4			18,3		

NOTE: ( ) Boom angles are in degrees. A6-829-10383 9
#LMI operating code. Refer to LMI manual for operating instructions.
*This capacity is based upon maximum boom angle.

NOTES:

1.All capacities above the bold line are based on structural strength of boom extension and do not exceed 85% of tipping loads, in accordance with SAE J-765.

2.The 10,0 m and 17,0 m extension lengths may be used for single line lifting service only.

3.For main boom lengths less than 39,0 m with the boom extension erected, the rated loads are determined by boom angle. Use only the column which corresponds to the boom extension length and offset for which the machine is set up. For boom angles not shown, use rating of the next lower boom angle.

4. WARNING: Operation of this machine with heavier loads than the capacities listed is strictly prohibited. Machine tipping with boom extension occurs rapidly and without advance warning.

5.Boom angle is the angle above or below horizontal of the longitudinal axis of the boom base section after lifting rated load.

6.Capacities listed are with outriggers properly extended and vertical jacks set only.

7.When lifting over the main boom nose with 10,0 m or 17,0 m extension erected, the outriggers must be fully extended or 50% extended (4,7 m spread).

Load charts - Metric 85%

12,6 m - 39,0 m | 10,0 m - 17,0 m | 6,1 m - 12,2 m | 0 kg | 100% 7,3 m | 360°

Radius in meters	23,1 m (17,0 m LENGTH + 1 INSERT)			29,2 m (17,0 m LENGTH + 2 INSERTS)		
	0° OFFSET	20° OFFSET	40° OFFSET	0° OFFSET	20° OFFSET	40° OFFSET
	#0884	#0885	#0886	#0884	#0885	#0886
16	2200 (77)					
18	2200 (75)			1595 (77)		
20	2200 (73)	*2400 (78)		1595 (75,5)		
22	2200 (71)	2125 (76)		1595 (73,5)	*1695 (78)	
24	2155 (69)	1905 (74)	*1835 (78)	1,595 (71,5)	1585 (76)	
26	1945 (67)	1710 (71,5)	1580 (75,5)	1485 (70)	1395 (74)	*1470 (78)
28	1570 (65)	1540 (69,5)	1440 (73)	1295 (68)	1235 (72,5)	1195 (75,5)
30	1235 (62,5)	1395 (67,5)	1310 (71)	1120 (66)	1085 (70,5)	1060 (73,5)
32	945 (60,5)	1255 (65)	1190 (68,5)	875 (64)	950 (68,5)	935 (71,5)
34	685 (58,5)	1030 (63)	1085 (66)	600 (62)	835 (66,5)	830 (69,5)
36		780 (60,5)	985 (63,5)		725 (64,5)	730 (67,5)
38		560 (58,5)	755 (61)		500 (62,5)	635 (65)
40			535 (58,5)			530 (63)
Minimum boom angle (°) for indicated length (no load)	55,5	56,5	57	60	61,5	61,5
Maximum boom length (m) at 0° boom angle (no load)	18,3			15,2		

NOTE: ( ) Boom angles are in degrees. A6-829-10385 3
#LMI operating code. Refer to LMI manual for operating instructions.
*This capacity is based upon maximum boom angle.

NOTES:

1.All capacities above the bold line are based on structural strength of boom extension and do not exceed 85% of tipping loads, in accordance with SAE J-765.

2.The 17,0 m extension lengths may be used for single line lifting service only.

3.For main boom lengths less than 39,0 m with the boom extension erected, the rated loads are determined by boom angle. Use only the column which corresponds to the boom extension length and offset for which the machine is set up. For boom angles not shown, use rating of the next lower boom angle.

4. WARNING: Operation of this machine with heavier loads than the capacities listed is strictly prohibited. Machine tipping with boom extension occurs rapidly and without advance warning.

5.Boom angle is the angle above or below horizontal of the longitudinal axis of the boom base section after lifting rated load.

6.Capacities listed are with outriggers properly extended and vertical jacks set only.

7.When lifting over the main boom nose with 17,0 m extension erected and inserts, the outriggers must be fully extended or 50% extended and vertical jacks set.

THIS CHART IS ONLY A GUIDE AND SHOULD NOT BE USED TO OPERATE THE CRANE.
The individual crane's load chart, operating instructions and other instructional plates must be read and understood prior to operating the crane.

Weight reductions for load handling devices		
10 m - 17 m (33 ft - 56 ft) folding boom extension		
*10 m (33 ft) ext (erected)	2536 kg	5590 lb
*17 m (56 ft) ext (erected)	5924 kg	13,060 lb
*23,2 m (76 ft) ext (1 insert erected)	6201 kg	13,670 lb
*29,3 m (96 ft) ext (2 inserts erected)	9380 kg	20,650 lb
*Reduction of main boom capacities (no deduct required for stowed boom extension) When lifting over swingaway and/or jib combinations, deduct total weight of all load handling devices reeved over main boom nose directly from swingaway or jib capacity.		
Auxiliary boom nose:	62 kg	136 lb
Hook blocks and headache balls:		
68,0 t (75 USt) 4-sheave	578 kg+	1275 lb+
36,3 t (40 USt) 3-sheave	373 kg+	823 lb+
9,1 t (10 USt) overhaul ball	258 kg+	568 lb+
+ Refer to rating plate for actual weight. NOTE: All load handling devices and boom attachments are considered part of the load and suitable allowances MUST BE MADE for their combined weights. Weights are for Grove furnished equipment.		

Boom section vs. section extension percentages

Main boom length in m (ft):	12,6 41.3	15.2 50	18.3 60	21.3 70	24.4 80	27.4 90	30.5 100	33.5 110	36.6 120	39.0 128
Boom sections:	**Percent extension:**									
Inner-mid	0	30	65	100	100	100	100	100	100	100
Outer-mid	0	0	0	0	7	34	52	69	86	100
Fly	0	0	0	0	14	34	52	69	86	100

Line pulls and reeving information

Hoists	Cable Specs	Permissible line pulls	Nominal cable length
Main and Aux.	19 mm (3/4 in) Flex-X 35 Rotation resistant (non-rotating) Min. breaking strength 38 918 kg (85,875 lb)	7790 kg (17,175 lb)	185,0 m (607 ft)
The approximate weight of 19 mm (.75 in) wire rope is 2,24 kg/m (1.5 lb/ft)			

Hoist performance

Wire rope layer	Hoist line pulls Two-speed hoist		Drum rope capacity	
	Low Available kg (lb)*	High Available kg (lb)*	Layer m (ft)	Total m (ft)
1	9105 (20,250)	4359 (9610)	30,8 (101)	30,8 (101)
2	8387 (18,490)	3978 (8770)	33,5 (110)	64,3 (211)
3	7116 (17,010)	3660 (8070)	36,6 (120)	100,9 (331)
4	7144 (15,750)	3388 (7470)	39,3 (129)	140,2 (460)
5	6650 (14,660)	3157 (6969)	42,4 (139)	182,6 (599)
*Max lifting capacity: 35x7 class =7790 kg (17,175 lb)				

Working area diagram

Bold lines determine the limiting position of any load for operation within working areas indicated.

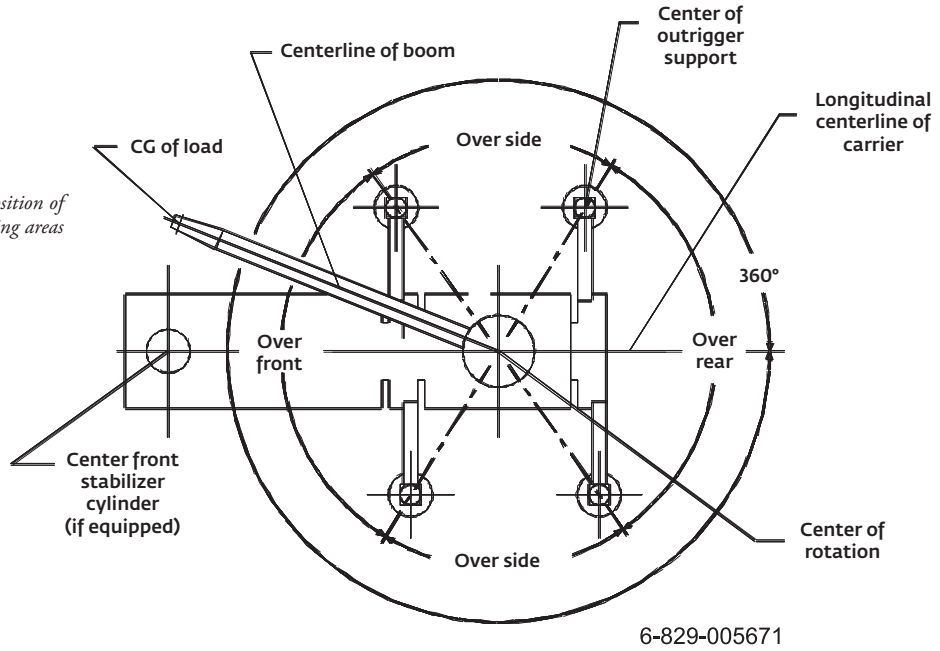

THIS CHART IS ONLY A GUIDE AND SHOULD NOT BE USED TO OPERATE THE CRANE.
The individual crane's load chart, operating instructions and other instructional plates must be read and understood prior to operating the crane.

Symbols glossary

- Axles
- Boom
- Boom elevation
- Boom extension
- Boom length
- Boom nose
- Brakes
- Cab
- Counterweight
- Drive
- Electrical system
- Engine
- Extension
- Frame
- Fuel tank capacity
- Gear
- Grade
- Heavy duty jib
- Hoist
- Hookblock
- Hydraulic system
- Lights
- Oil
- Outrigger controls
- Outriggers
- Radius
- Rotation
- Speed
- Steering
- Suspension
- Swing
- Tires
- Transmission

Notes

Manitowoc Cranes

Regional headquarters

Americas
Milwaukee, Wisconsin, USA
Tel: +1 414 760 4600

Shady Grove, Pennsylvania, USA
Tel: +1 717 597 8121

Europe and Africa
Dardilly, France - TOWERS
Tel: +33 (0) 4 72 18 20 20

Wilhelmshaven, Germany - MOBILE
Tel: +49 (0) 4421 294 0

APAC
Shanghai, China
Tel: +86 21 6457 0066

Singapore
Tel: +65 6264 1188

Middle East and India
Dubai, UAE
Tel: +971 4 8862677

Manitowoc Crane Care™

Manitowoc Finance™

This document is non-contractual. Constant improvement and engineering progress make it necessary that we reserve the right to make specification, equipment, and price changes without notice. Illustrations shown may include optional equipment and accessories and may not include all standard equipment.

©2020 Manitowoc

Form No. TMS800E
Part No. 05-013-2M-0120

www.manitowoc.com