TEREX®

RT 780

80 USt Lifting Capacity
Rough Terrain Cranes
Datasheet
Imperial

RT 780

Features

- Rated capacity:
  80 USt @ 10 ft working radius
- Maximum boom length:
  126 ft
- Maximum tip height:
  190 ft

WORKS FOR YOU.™

CONTENTS

Page:

Key

. 3

Dimensions

Crane dimensions 4
Crane weights 5

Load charts

Range Diagram – Main Boom – Outriggers fully extended (100%) 6
Load Chart – Main Boom – Outriggers fully extended (100%) 7
Range Diagram – Main Boom – Outriggers fully retracted (0%). 8
Load Chart – Main Boom – Outriggers fully retracted (0% 9
Range Diagram – Main Boom – 33 ft offsettable jib. 10
Load Chart – Main Boom – 33 ft offsettable jib. 11
Range Diagram – Main Boom – 57 ft offsettable jib. 12
Load Chart – Main Boom – 57 ft offsettable jib. 13
Range Diagram – Main Boom – On tires. 14
Load Chart – Main Boom – On tires. 15

Technical description

Boom 16
Hoist, rope and hook. 16, 17
Superstructure 17
Cab, controls, operator aids and load limiter / load indicator 18
Carrier, engine, drive-line and hydraulic system 18, 19
Vehicle performance. 19
Tires 19

KEY

	Counterweight		General performance
	Main boom		Telescoping mode
	Boom length		Boom luffing angle
	Tip height		Working radius
	Boom with extension		Max. boom length with extension
	Main boom with aux head		Distance from the hook to the head sheave pin
	Slewing / Allowable slewing range		Slewing locked / Slewing locked at specified position
	Slewing brake		Slewing gears
	Outriggers / Lifting on outriggers (100/50/0% extended)		Lifting on wheels / Pick & Carry
1	Main hoist	2	Auxiliary hoist
	Hoist speed		Rope length
	Rope – Standard / Optional		Max. line pull
	Rope diameter		Tire
	Hook block		Controls
	Cab		Engine
	Operator aids / Load limiter / Load indicator		Steering
	Mechanical transmission		Speed
HYDR	Hydraulics		Heating / Air conditioning
	Working temperature		Gradeability
	Lights	GVW	Gross vehicle weight
	Crane / Crane in standard configuration		Weight on front axle
	Crane without counterweight		Weight on rear axle

CRANE DIMENSIONS

RT 780

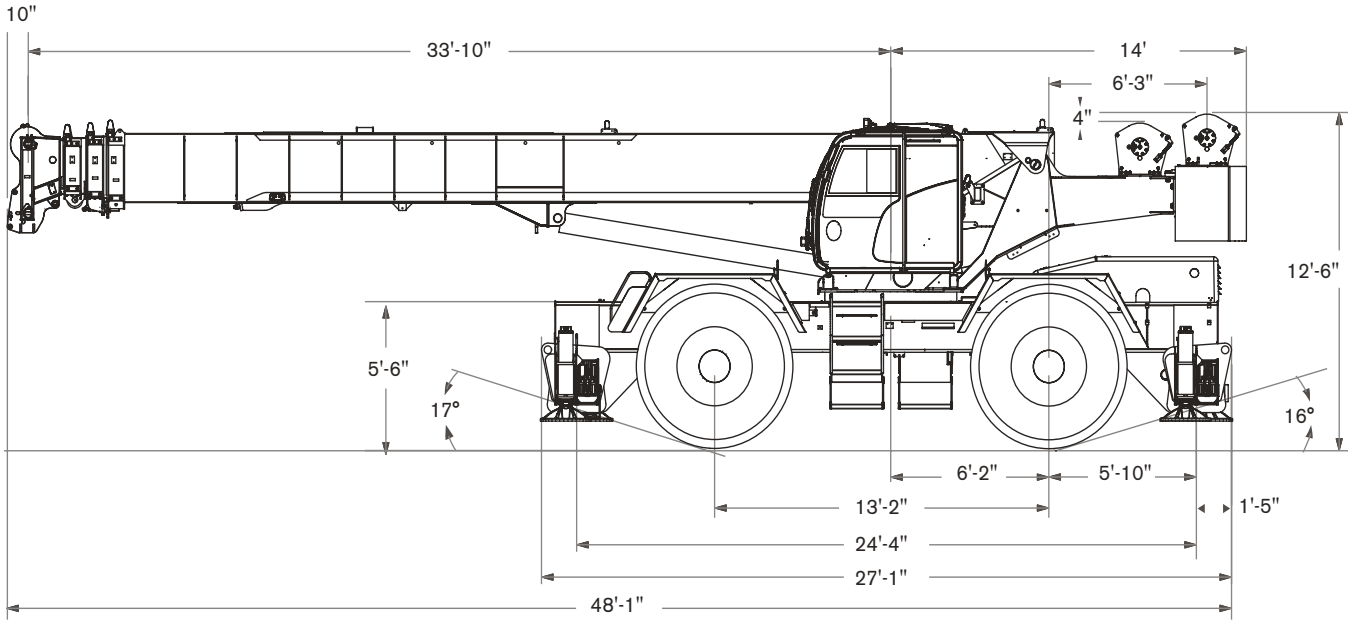

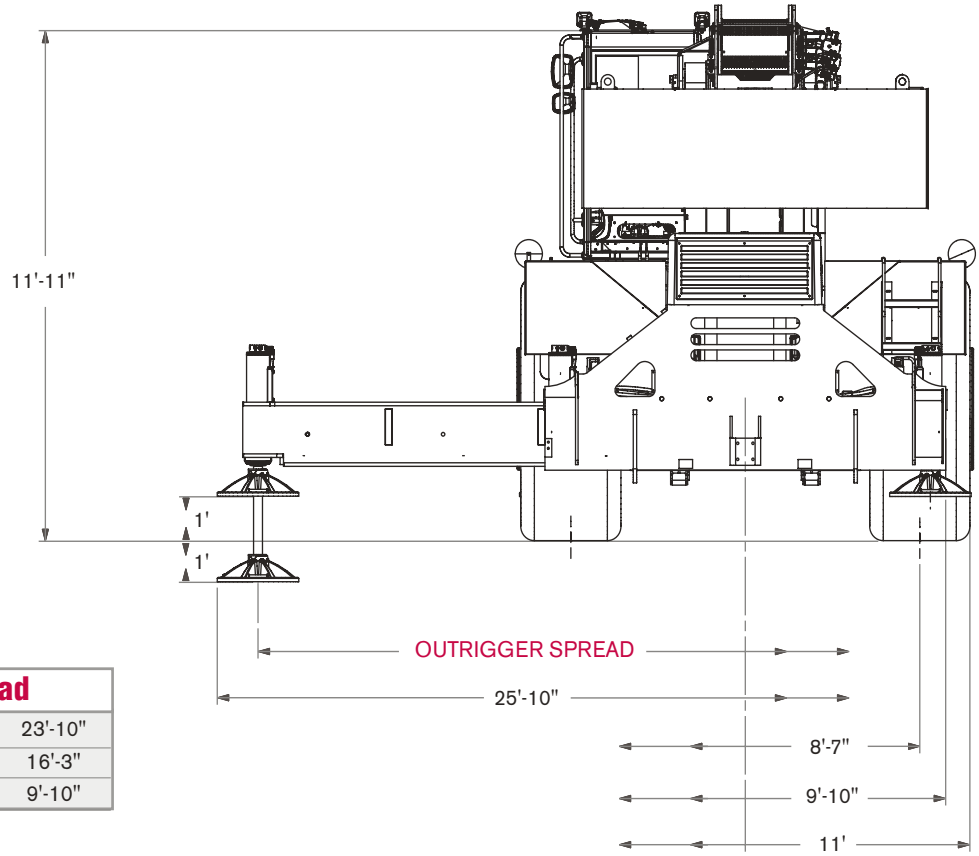

Outrigger Spread	
Fully Extended	23'-10"
Half	16'-3"
Fully Retracted	9'-10"

CRANE WEIGHTS

RT 780

Approximate Weights

	GVW		
STD	91,216 lb	47,047 lb	44,169 lb
Add / Subtract for main optional equipment			
33 ft to 57 ft swing on jib stowed	+ 2,170 lb	+ 3,992 lb	– 1,822 lb
Auxiliary boom head	+ 125 lb	+ 406 lb	– 281 lb
2 Auxiliary hoist*	+ 134 lb	– 35 lb	+ 159 lb
5 sheaves, 75 USt	+ 1,608 lb	+ 3,447 lb	– 1,839 lb
5 sheaves, 60 USt	+ 1,204 lb	+ 2,581 lb	– 1,377 lb

NOTE: Values are subject to 2% variation

* Weight includes rope

RANGE DIAGRAM - MAIN BOOM

RT 780

Outriggers Fully Extended (100%)

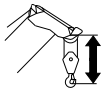

with hook block:
6 ft 9 in

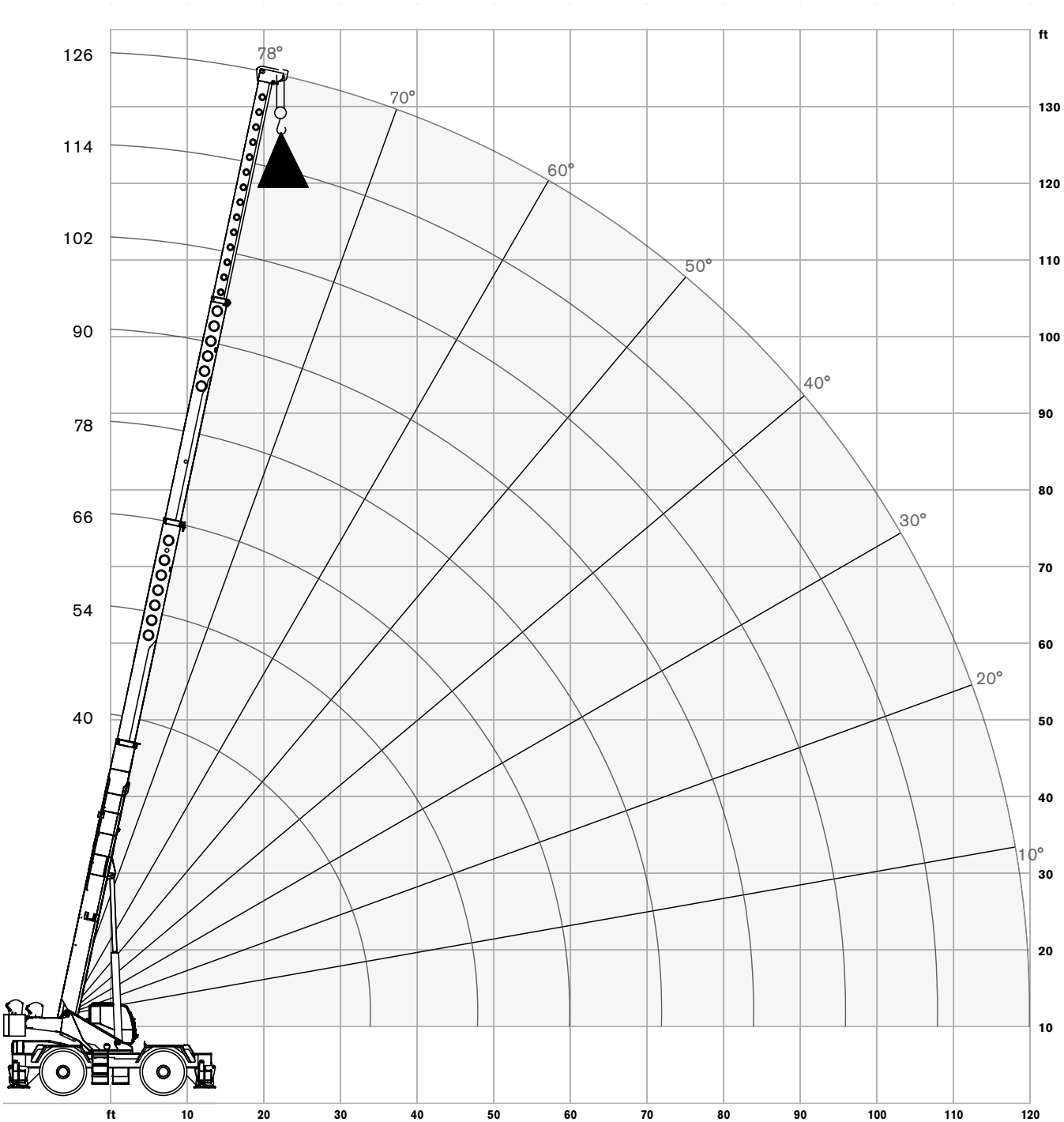

TEREX®

LOAD CHART - MAIN BOOM

RT 780

Outriggers Fully Extended (100%)

15,200 lbs counterweight

Outriggers extended 24 ft (100%)

360 degree rotation

Standard ASME B30.5

	Boom Length								
	40 ft	54 ft	66 ft	78 ft	90 ft	102 ft	114 ft	126 ft	
ft	lb	lb	lb	lb	lb	lb	lb	lb	ft
10	160,000	102,500							10
12	125,600	102,500							12
15	108,800	100,500	80,600						15
20	84,700	85,300	71,900	62,200	56,200				20
25	65,600	66,700	64,800	55,700	48,000	41,900			25
30	49,200	50,500	51,000	49,700	41,700	36,400	31,500		30
35		37,700	38,200	38,500	36,600	32,100	29,500	24,700	35
40		29,400	29,900	30,200	30,400	28,600	26,200	24,600	40
45		23,500	24,100	24,400	24,600	24,700	23,500	22,100	45
50			19,800	20,200	20,300	20,500	20,600	20,000	50
55			16,400	16,900	17,100	17,200	17,300	17,400	55
60				14,200	14,500	14,600	14,700	14,800	60
65				12,100	12,300	12,500	12,600	12,700	65
70				10,300		10,800	10,900	10,900	70
75						9,200	9,400	9,400	75
80						7,900	8,100	8,200	80
85						6,800	6,900	7,100	85
90						5,800	6,000	6,100	90
95						4,900	5,100	5,200	95
100							4,300	4,400	100
105							3,600	3,700	105
110								3,100	110
115								2,500	115

Notes to lifting capacity

Lifting capacities do not exceed 85% of tipping load. Weight of hook blocks and slings is part of the load, and is to be deducted from the capacity ratings. Consult operation manual for further details.

Note: Data published herein is intended as a guide only and shall not be construed to warrant applicability for lifting purposes. Crane operation is subject to the computer charts and operation manual both supplied with the crane.

RANGE DIAGRAM - MAIN BOOM

RT 780

Outriggers Fully Retracted (0%)

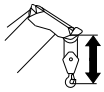

with hook block:
6 ft 9 in

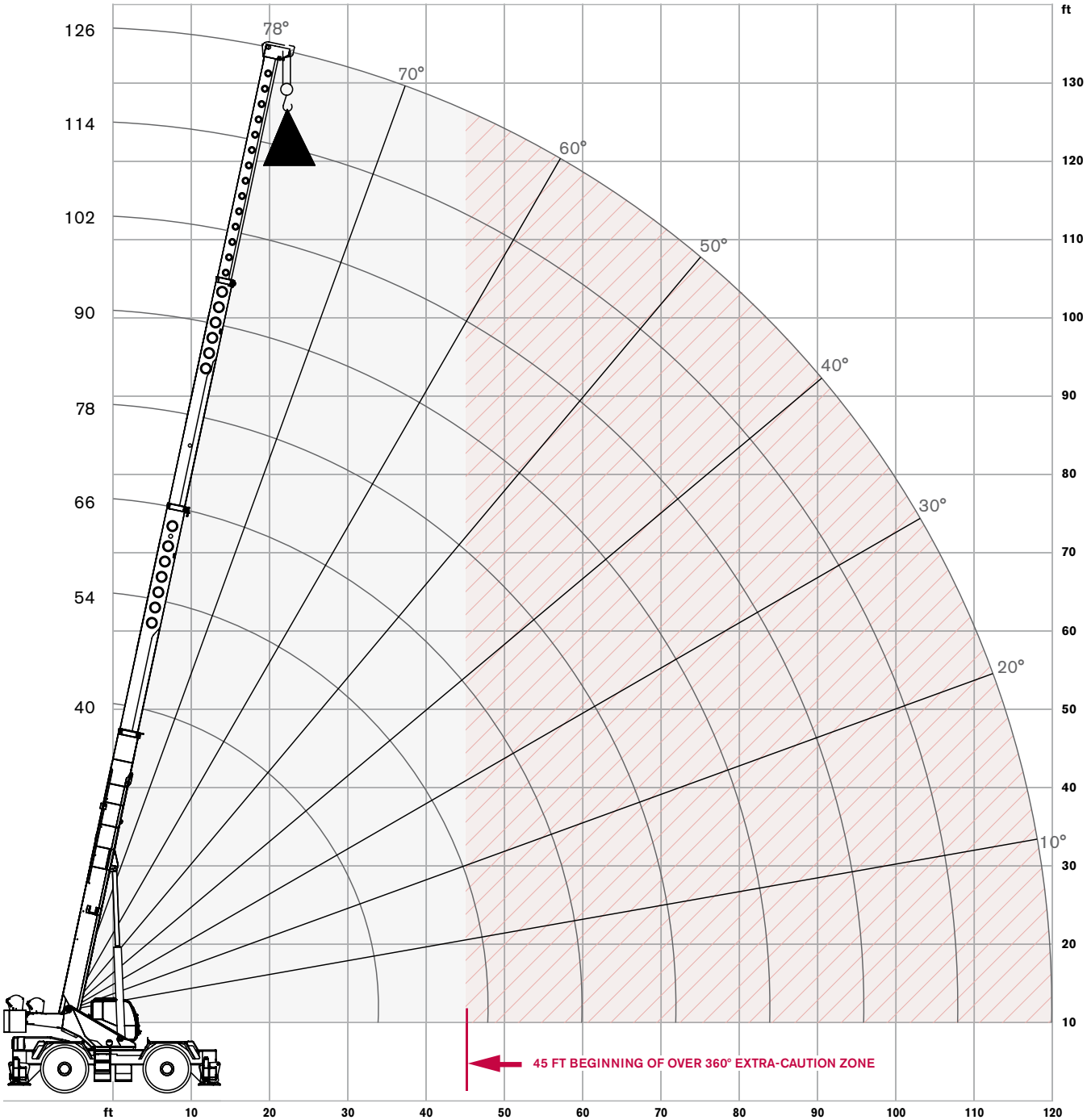

TEREX®

LOAD CHART - MAIN BOOM

RT 780

Outriggers Fully Retracted (0%)

15,200 lbs counterweight

Outriggers retracted 9 ft 10 in (0%)

360 degree rotation

Standard ASME B30.5

	Boom Length								
	40 ft	54 ft	66 ft	78 ft	90 ft	102 ft	114 ft	126 ft	
ft	lb	lb	lb	lb	lb	lb	lb	lb	ft
10	84,500	85,600							10
12	59,300	60,300							12
15	39,300	40,400	40,800						15
20	23,200	24,300	24,800	25,000	25,200				20
25	14,900	16,000	16,500	16,800	17,000	17,000			25
30	9,800	10,900	11,400	11,800	12,000	12,000	12,100		30
35		7,500	8,000	8,400	8,600	8,600	8,800	8,900	35
40		5,000	5,600	5,900	6,100	6,100	6,300	6,500	40
45		3,200	3,700	4,000	4,300	4,300	4,500	4,700	45
50							3,000	3,300	50

Notes to lifting capacity

Lifting capacities do not exceed 85% of tipping load. Weight of hook blocks and slings is part of the load, and is to be deducted from the capacity ratings. Consult operation manual for further details.

Note: Data published herein is intended as a guide only and shall not be construed to warrant applicability for lifting purposes.
Crane operation is subject to the computer charts and operation manual both supplied with the crane.

RANGE DIAGRAM - MAIN BOOM

RT 780

With Jib, 33 ft offset

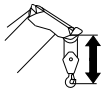

with hook block:
6 ft 9 in

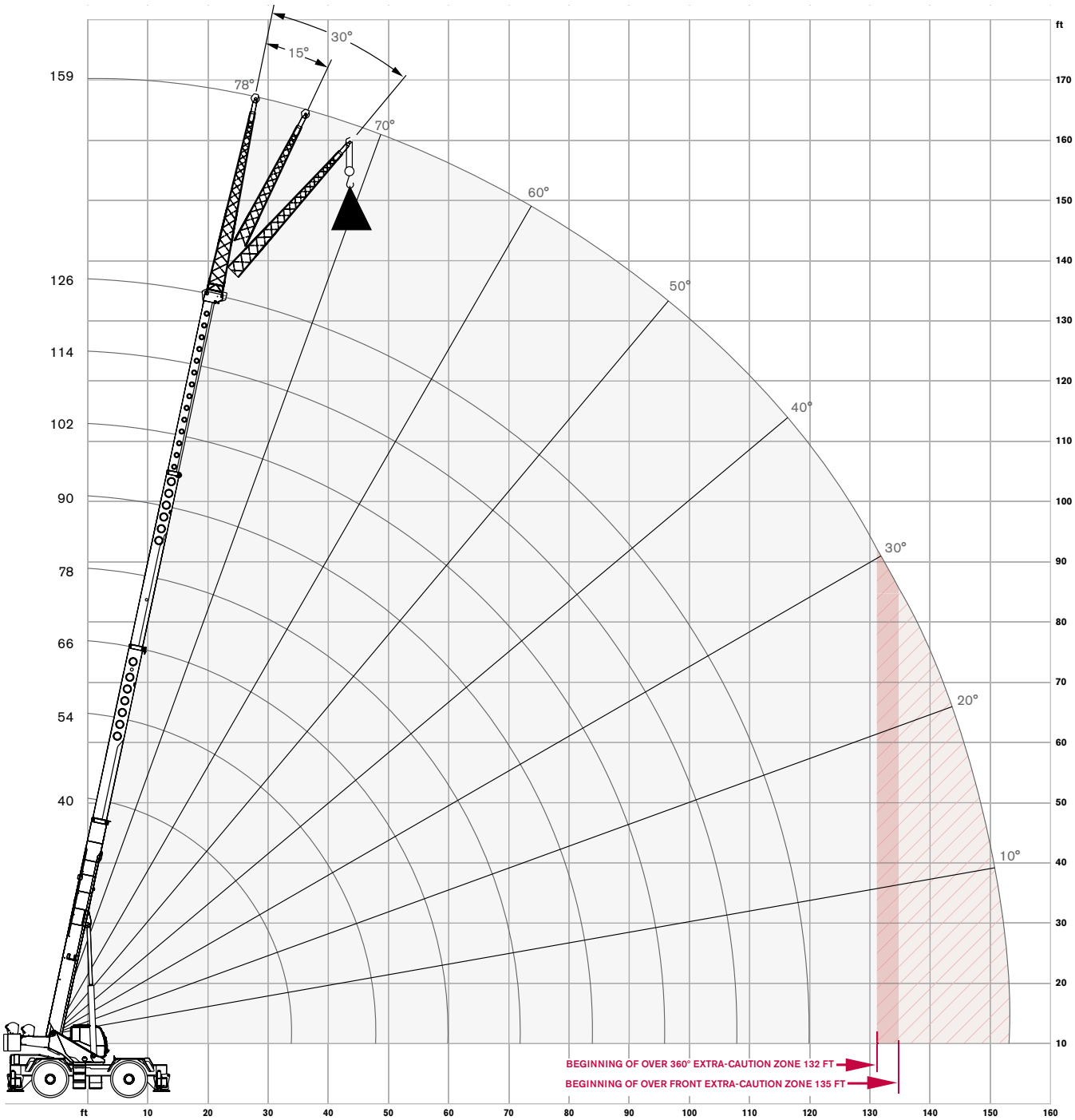

TEREX®

LOAD CHART - MAIN BOOM

RT 780

With Jib, 33 ft offset

15,200 lbs counterweight

Outriggers extended 24 ft (100%)

360 degree rotation

Standard ASME B30.5

33 ft Offsettable Jib					
0° Offset		15° Offset		30° Offset	
Radius (ft)	lbs	Radius (ft)	lbs	Radius (ft)	lbs
41	12,500	50	8,500	57	6,400
47	12,000	56	8,100	62	6,200
52	11,500	61	7,800	67	6,100
58	10,900	67	7,500	72	5,900
66	9,900	74	7,100	79	5,900
74	9,200	81	6,700	86	5,600
81	8,600	88	6,400	93	5,400
88	7,300	95	6,200	99	5,300
97	5,700	103	5,200	107	5,200
105	4,500	111	4,200	114	4,300
113	3,600	117	3,400	120	3,500
120	2,900	124	2,700	126	2,800
127	2,200	131	2,000	132	1,900
135	1,600	138	1,400	138	1,100

Notes to lifting capacity

Lifting capacities do not exceed 85% of tipping load. Weight of hook blocks and slings is part of the load, and is to be deducted from the capacity ratings. Consult operation manual for further details.

Note: Data published herein is intended as a guide only and shall not be construed to warrant applicability for lifting purposes.
Crane operation is subject to the computer charts and operation manual both supplied with the crane.

RANGE DIAGRAM - MAIN BOOM

RT 780

With Jib, 57 ft offset

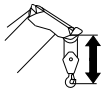

with hook block:
6 ft 9 in

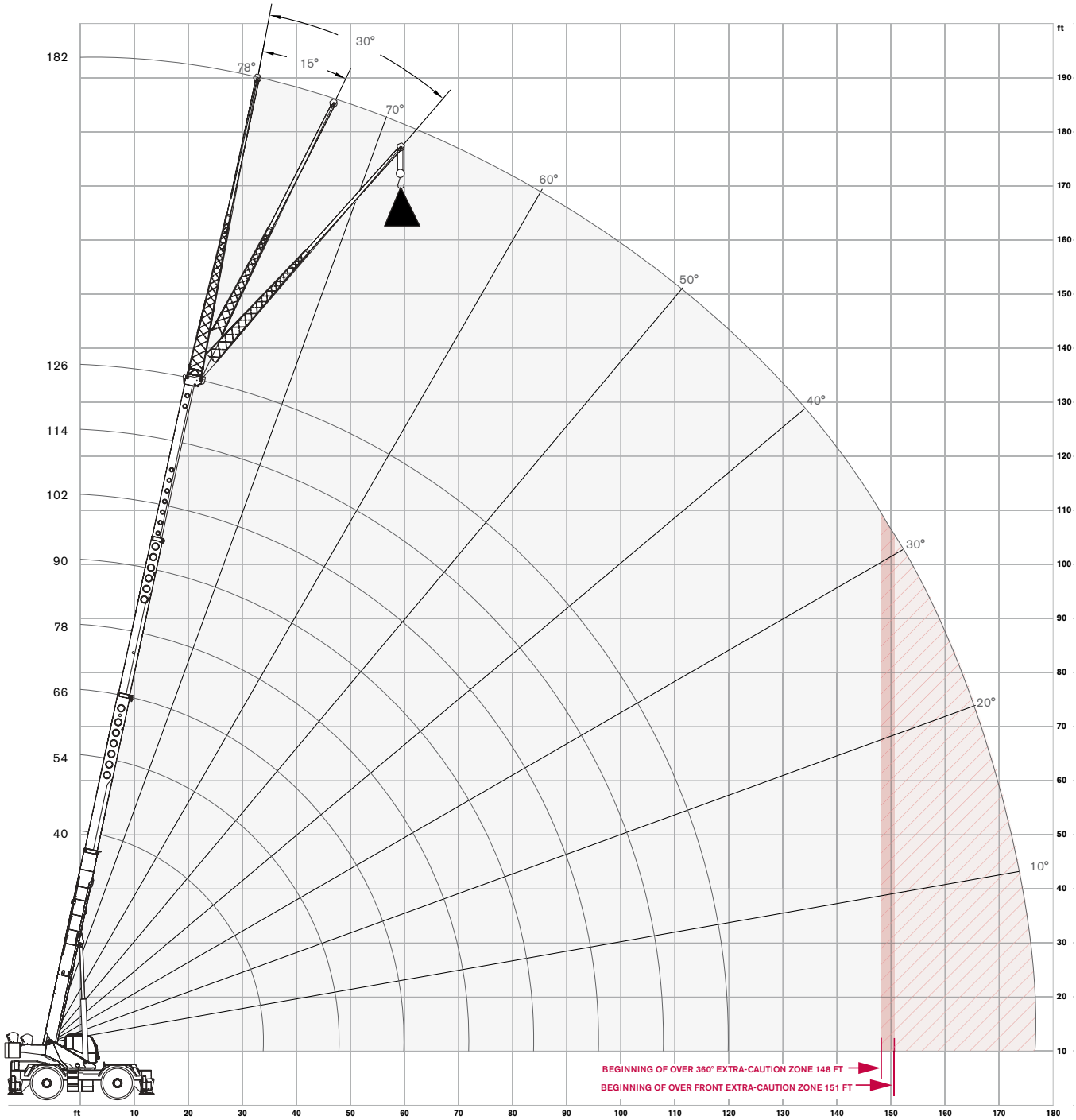

TEREX®

LOAD CHART - MAIN BOOM

RT 780

With Jib, 57 ft offset

15,200 lbs counterweight

Outriggers extended 24 ft (100%)

360 degree rotation

Standard ASME B30.5

57 ft Offsettable Jib					
0° Offset		15° Offset		30° Offset	
Radius (ft)	lbs	Radius (ft)	lbs	Radius (ft)	lbs
48	6,500	66	4,500	75	3,300
56	6,400	72	4,300	81	3,200
63	6,200	77	4,100	87	3,100
70	6,000	83	3,900	92	3,000
80	5,400	91	3,700	100	2,900
90	4,900	99	3,500	108	2,800
98	4,500	106	3,300	115	2,700
106	4,200	114	3,100	121	2,600
116	3,800	123	2,900	129	2,500
125	3,500	132	2,800	137	2,500
133	2,800	140	2,600	143	2,400
140	2,200	147	2,100	149	2,000
148	1,600	154	1,500	155	1,500
157	1,000	161	1,000	162	1,000

Notes to lifting capacity

Lifting capacities do not exceed 85% of tipping load. Weight of hook blocks and slings is part of the load, and is to be deducted from the capacity ratings. Consult operation manual for further details.

Note: Data published herein is intended as a guide only and shall not be construed to warrant applicability for lifting purposes.
Crane operation is subject to the computer charts and operation manual both supplied with the crane.

RANGE DIAGRAM - MAIN BOOM

RT 780

On Tires

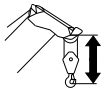

with hook block:
6 ft 9 in

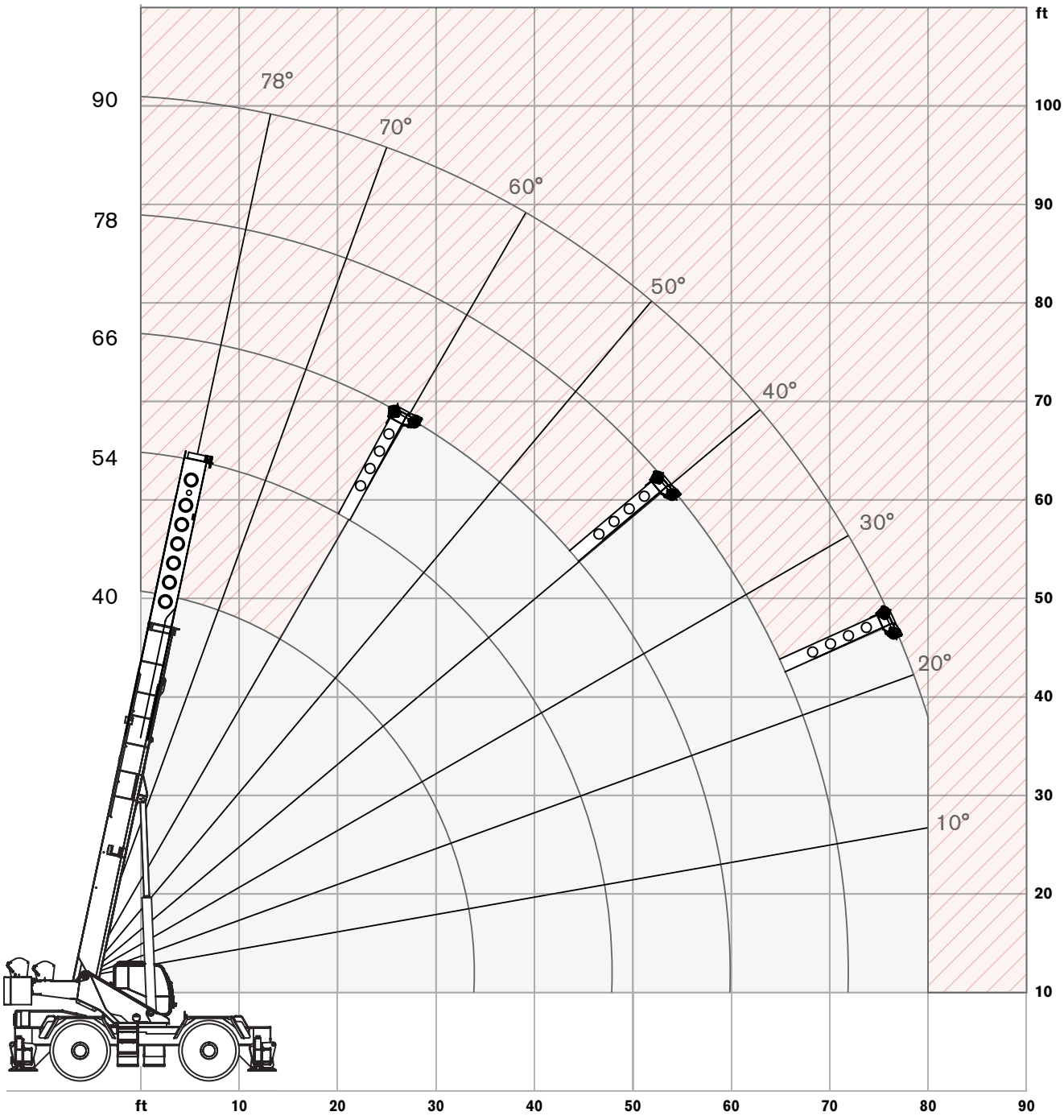

LOAD CHART - MAIN BOOM

RT 780

On Tires

15,200 lbs counterweight

360 degree rotation

On tires 29.5 X 25-28PR

Standard ASME B30.5

Boom		Travel Speed Boom straight over front		
Radius	Length	0 mph	Creep	2.5 mph
ft	ft	lb	lb	lb
10	40	82,700	68,700	51,800
12	40	69,800	60,400	45,300
15	40	54,200	50,700	37,600
20	40	36,000	36,000	28,700
25	54	24,900	24,700	22,500
30	54	18,200	18,200	17,800
35	54	14,200	14,200	14,200
40	66	11,600	11,600	11,100
45	66	9,600	9,600	9,000
50	66	7,900	7,900	7,900
55	78	6,300	6,300	6,300
60	78	4,900	4,900	4,900
65	78	3,300	3,300	3,300
70	90	3,100	3,100	3,100
75	90	2,700	2,700	2,700
80	90	2,200	2,200	2,200

Notes to lifting capacity

Lifting capacities do not exceed 75% of tipping load. Weight of hook blocks and slings is part of the load, and is to be deducted from the capacity ratings. Consult operation manual for further details.

Note: Data published herein is intended as a guide only and shall not be construed to warrant applicability for lifting purposes.
Crane operation is subject to the computer charts and operation manual both supplied with the crane.

Boom

Standard configuration:	
4 sections hydraulic actuated boom	
Full power mechanically synchronized	
Min. / Max.	40 ft / 126 ft
Boom elevation angle range (min. / max.)	-4° / 78°
Optional configuration:	
Single sheave	
One section, side stowable, with pull out insert Angular offsets	33 ft / 57 ft 0, 15 and 30 degrees
Jib with pull out extended	190 ft

Hoist, Rope and Hook

Standard configuration:	
Grooved drum Storage capacity	561 ft
Two speed ratios Without load in 5th layer (low range / high range) Without load in 1st layer (low range / high range)	 275 ft/min / 489 ft/min 191 ft/min / 341 ft/min
6 x 19 IWRC XIPS, right regular lay, preformed	
	3/4 in
	600 ft
Max. line pull; 1st layer low-range Max. line pull permissible	18,450 lb 13,800 lb

Optional configuration:

5 sheaves	60 USt
5 sheaves	80 USt
Grooved drum	
Storage capacity	591 ft
Without load in 5th layer (maximum)	489 ft/min
Rotation resistant compacted strand 34X7	
	3/4 in
	600 ft
Minimum breaking strength	69,000 lbs
Permissible line pull	13,800 lbs

Superstructure

Standard configuration:

Non stop	360°
Maximum rotation speed without load	2.2 rpm
Hydraulic motor	
Planetary reducer	
Manually actuated by foot pedal	
360° house lock	

Cab, Controls, Operator aids and Load limiter / Load indicator

Standard configuration:

Sliding door on the left side
Sliding window on left side and rear
Hinged, tinted all glass skylight
Six way adjustable and heated seat
Work lights
Signal lights indicating RCL-Load
18° tiltable cab

Armrest mounted dual axis electro-proportional joysticks
Joystick controls for hoist, hoist rotation indicator, slewing, boom elevation, boom telescoping
Foot controls for swing brake, service brake, and engine throttle
Steering wheel column with gear selector on the left and directional light selector on the right
Dashboard mounted switches for outrigger operation and steering mode

Graphic interface for rated capaciy indicator

Standard HVAC, flameless heat

Optional configuration:

Diesel power heater
Strobe light
Rotating beacon

Carrier, Engine, Drive-line and Hydraulic system

Standard configuration:

Hydraulic, independent extension:	
Diameter of outrigger pads	24 in
Area of outrigger pads	452 in²
Cummins QSB6.7 6 cylinders - Tier 4F	
Rated power	260 hp @ 2,200 rpm
Maximum gross torque	730 ft·lb @ 1,500 rpm
Intake: turbocharger with intercooler	
Fuel type	Ultra Low Sulfur Diesel
Fuel tank capacity	80 gallons

Optional configuration:

Cummins QSB6.7 6 cylinders - Tier 3	
Rated power	260 hp @ 2,200 rpm
Maximum gross torque	730 ft·lb @ 1,500 rpm
Intake: turbocharger with intercooler	
Fuel type	Diesel
Fuel tank capacity	80 gallons

6 x 6 powershift transmission with torque converter
Selectable 4WD (Four-Wheel Drive)
Rigid mounted front axle
Oscillating rear axle
Differential lock on front and rear axles
Rear axle oscillation lock - manual or automatic actuation
Air-over-hydraulic disc brakes
Front axle parking brake
Hydraulic oil cooler

Hydraulic power steering
Front wheel steering
Four wheel steering concentric
Four wheel steering crab

HYDR

Hydraulic Pumps:

Tandem pumps:	
Boom lift / Telescope	57.8 gal/min @ 4,500 psi
Power steering / Outriggers and swing	42.1 gal/min @ 4,500 psi
Single pump:	
Main and auxiliary hoist pump	52.7 gal/min @ 4,500 psi

Hydraulic oil reservoir capacity	178 gallons
Hydraulic oil suction filter	250 microns
Hydraulic oil return filter	5 microns

Vehicle performance

Standard configuration:

Max. in 1st gear	98.9%
Max. in 6th gear	3%
Max. (6th gear)	25 mph

Tires

Standard configuration:

Wide tread - Earth mover pattern	29.5 X 25-28PR

Effective Date: August 2014. Product specifications and prices are subject to change without notice or obligation. The photographs and/or drawings in this document are for illustrative purposes only. Refer to the appropriate Operator's Manual for instructions on the proper use of this equipment. Failure to follow the appropriate Operator's Manual when using our equipment or to otherwise act irresponsibly may result in serious injury or death. The only warranty applicable to our equipment is the standard written warranty applicable to the particular product and sale and Terex makes no other warranty, express or implied. Products and services listed may be trademarks, service marks or trade-names of Terex Corporation and/or its subsidiaries in the USA and other countries. All rights are reserved. Terex® is a registered trademark of Terex Corporation in the USA and many other countries.

Copyright 2014 Terex Corporation.

Terex Cranes, Global Marketing, Dinglerstraße 24, 66482 Zweibrücken, Germany
Tel. +49 (0) 6332 830, Email: info.cranes@terex.com, www.terexcranes.com

www.terexcranes.com

Brochure Reference: TC-DS-I-E-RT780-08/14

TEREX®

WORKS FOR YOU.™